- SERIE DRC -
Riduttori Coassiali

Coaxial Gearboxes

ELLE.GI SRL

Organi di Trasmissione

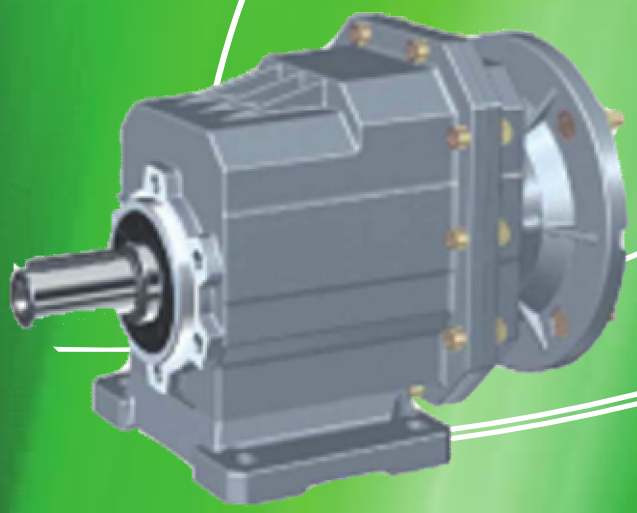

CONTENUTI - CONTENTS

SOMMARIO - SUMMARIZE

DRC Series jelical gear units is a new generation mechanic-electrical integrated product, which designed basing on the modular system. It can be connected respectively with motors such a normal motor, brake motor, explosion-proof motors, frequency conversion motor, servo motor, IEC motor and so on. It can be mounted discretionary six orientation in solid space. This kind of product is widely used in drive fields such as textile, foodstuff, beverage, chemical industry, automatic arm ladder, automatic storage equipment, metallurgy, tobacco, environment-protection, logistics and so on.

La serie dei riduttori DRC è una nuova generazione di prodotti integrati meccanico-elettrico, disegnato su sistemi modulari. Può essere collegato con motori quali motori normali, autofrenanti, antiesplosione, servo motori e cosi' via. Possono essere montati in 6 posizioni differenti. Questo tipo di prodotto è ampiamente utilizzato in settori quali, quello tessile, alimentare, industria chimica e così via.

Caratteristiche del prodotto - Products characteristics

* ***Modularity -*** *Modularità*
* ***High efficiency*** *- Alta efficienza*
* ***Low noise****; - Bassa rumorosità*
* ***Space effective, refined design*** *- Spazio efficace, disegno rifinito*
* ***Universal mounting*** *- Montaggio universale*
* ***Alluminium housing, light in weight*** *- Carcassa in alluminio*
* ***Gears in carbonize hard, durable*** *- Ingranaggi in carbonato duro, alta durata*
* ***Multistructure, can be conbined in many forms to meet needs of all kinds of transmission condictions*** *- Multistruttura, può essere conbinato in varie posizioni per incontrare qualsiasi necessità di trasmissione.*

Drc Series helical gear units has more than 5 types. Power 0.12-8KW, Ratio 3.66-58,78; Torque max 120-500Nm. It can be connected (foot, flange) discretionary and use multi-mounting positions according to customer's requirements.

La serie DRC ha piu' di 5 tipologie. La potenza da 0,12 a 8KW, rapporto da 3,66 a 58,78. Coppia massima da 120 a 500 NM. Può essere sollegato (a piedi o flangiato) a seconda delle necessità del cliente.

Struttura - Structure feature

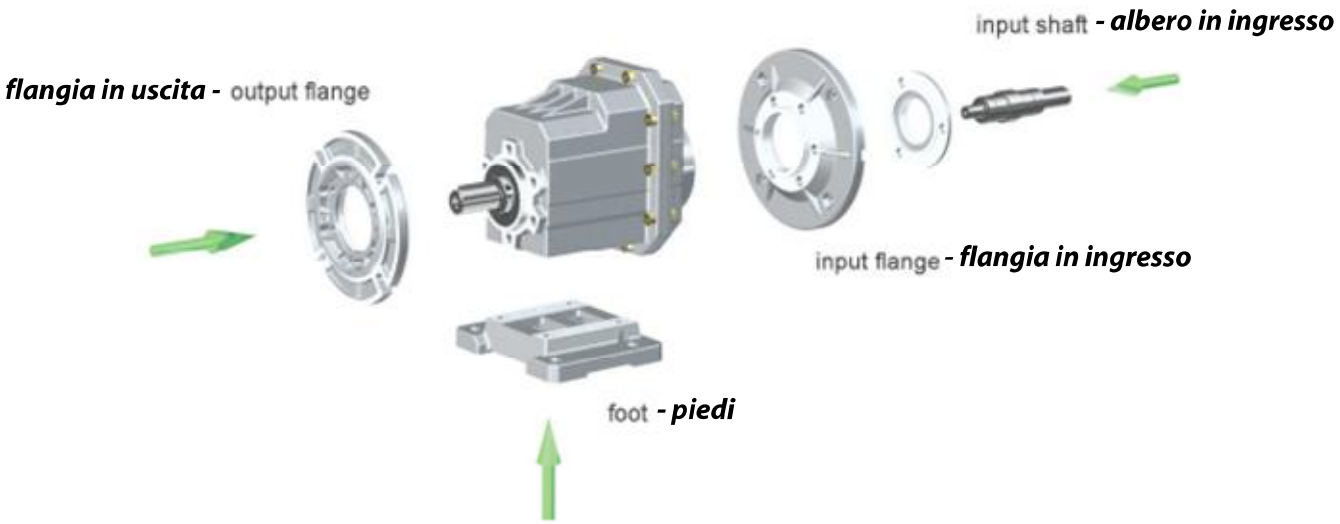

2 . IMMAGINI FORME COSTRUTTIVE - PRODUCT STRUCTURE PICTURE

DRC..P(IEC)
Foot-mounted helical gear unit
Versione a piedi

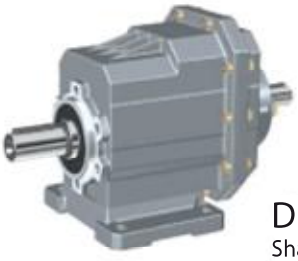

DRC..HS
Shaft input foot-mounted helical gear unit
Versione a piedi e albero ingresso

DRCF..P(IEC)
Flange-mounted helical gear unit
Versione a flangia in uscita

DRCF..HS
Shaft input flange-mounted helical gear unit
Versione a flangia e albero in ingresso

DRCZ..P(IEC)
B14 Flange-mounted helical gear unit
Versione a flangia B14 PAM

DRCZ..HS
Shaft input B14 flange-mounted helical gear unit
Versione albero in ingresso e flangia B14

DRC..MX..
Foot-mounted helical geared motors
Versione a piedi e motore

DRCZ..HS
Fflange-mounted helical geared motors
Versione a flangia e motore

DRCZ..MX..
B14 Flange-mounted helical geared motors
Versione a flangia B14 e motore

3. SPIEGAZIONE DEI CODICI / *MODEL ILLUMINATE*

Riduttore / Gear unit

DRC F 02 - II - P71B5 28.88 - M6

(1) (2) (3) (4) (5) (6) (7)

No		Comments
1	Codice indicante la serie **DRC**	Code for gear units series: **DRC**
2	*1) Nessun codice: piedi montati* *2) F: flangia B5 montata* *3) Z: flangia B14 montata*	**1) No code means food-mounted** **2) F: B5 flange mounted** **3) Z: B14 flange mounted**
3	*Taglia del riduttore: 01, 02, 03, 04, 05*	**Specification code of gear units: 01, 02 , 03, 04, 05**
4	*1) PB, PM, PS = significa a piedi senza flangia* *2) I, II, III: B5 specifica della flangia in uscita. Standard tipo I non indispensabile indicarlo*	**1) PB, PM, PS= means foot code, without flange** **2) I, II, III: B5 Output flange specification, default I not to write out is ok**
5	*1) IEC: versione PAM, flangia in ingresso* *2) HS: versione albero in ingresso maschio*	**1) IEC: imput flange** **2) HS: shanft imput**
6	*i: Rapporto di riduzione*	**i: Transmission ratio of gear units**
7	*M1: posizione di montaggio. Standard M1 da non indicare*	**M1: Mounting position, default mountingposition M1 not to write out is ok**

4. *PARAMETRI IMPORTANTI*

4.1 *Potenza - P*

$$P_1 = \frac{P_2}{\eta} \text{ [kW]}$$

$$P_{1n} \geqslant P_1 \cdot f_s \text{ [kW]}$$

P_1	*Potenza in ingresso*
P_2	*Potenza in uscita*
P_{1n}	*Potenza del motore consigliata*
f_s	*Fattore di servizio*
η	*Rendimento*

Il rendimento della serie DRC ha due stadi e l'efficienza è di circa il 96%

4.2 *Velocità - n*

n_1	*Velocità in ingresso*
n_2	*Velocità in uscita*

Sono consigliate velocità in ingresso di 1400 giri/min o inferiori in modo da prolungare la vita del riduttore. Lo stesso può funzionare anche con velocita in ingresso sino a 3000 giri ma va ridotta la coppia in uscita che può sopportare il riduttore.

4. *RELEVANT PARAMETER*

4.1 *Power P*

$$P_1 = \frac{P_2}{\eta} \text{ [kW]}$$

$$P_{1n} \geqslant P_1 \cdot f_s \text{ [kW]}$$

P_1	Input power
P_2	Output power
P_{1n}	Rated power driving motor
f_s	Service factor
η	Transmission efficiency

DRC Series helical gear units has 2 stages and the efficiency is about 96%

4.2 *Rotation speed n*

n_1	Gear units input speed
n_2	Gear units output speed

If driven by the external gearing,1400r/min or lower rotation speed is suggested so as to optimize the working conditions and prolong the service life. Higher input rotation speed is permitted, but in this situation, the rated torque **M2** will be reduced.

4.3 Rapporto di trasmissione - *i*

$$i = \frac{n_1}{n_2}$$

Abitualmente il rapporto di riduzione viene indicato considerando 2 numeri decimali dopo la virgola.

4.4 Coppia - *M*

$$M_2 = \frac{9550 \cdot P_1 \cdot \eta}{n_2} \text{ [Nm]}$$

$$M_{2n} \geqslant M_2 \cdot f_s \text{ [Nm]}$$

M_2	*Coppia in uscita*
M_{2n}	*Coppia in uscita nominale*
P_1	*Potenza in ingresso*
η	*Rendimento*
f_s	*Fattore di servizio*

4.5 Fattore di servizio - f_s

Il fattore di servizio quantifica la maggiore o minore gravosità delle condizioni di funzionamento reali ovvero del servizio reale rispetto a quello nominale, determinando così il sovra o sottodimensionamento necessario per il riduttore che si deve scegliere.

Il grafico sotto riportato indica tre tipi di carico diversi che variano in funzione della massa da accelerare e dalla frequenza degli avviamenti. Dalla tabella dei parametri Si dovrà scegliere un riduttore che dia un fattore di servizio sempre superiore a 1.

4.3 Transmission ratio *i*

$$i = \frac{n_1}{n_2}$$

Usually transmission ratio is decimal fraction with 2 radix point tagged in selection tables.

4.4 Torque *M*

$$M_2 = \frac{9550 \cdot P_1 \cdot \eta}{n_2} \text{ [Nm]}$$

$$M_{2n} \geqslant M_2 \cdot f_s \text{ [Nm]}$$

M_2	Output torque
M_{2n}	Selected output torque
P_1	Input power
η	Transmission efficiency
f_s	Service factor

4.5 Service factor f_s

The effect of the driven machine on the gear unit is taken into account to a sufficient level of accuracy using the service factor f_s. The service factor is determined according to the daily operating time and the starting frequency **Z**.

Three load classifications are considered depending on the mass acceleration factor. You can read off the service factor applicable to your application in following Figure. The service factor selected using this diagram must be less than or equal to the service factor as given in the performance parameter table.

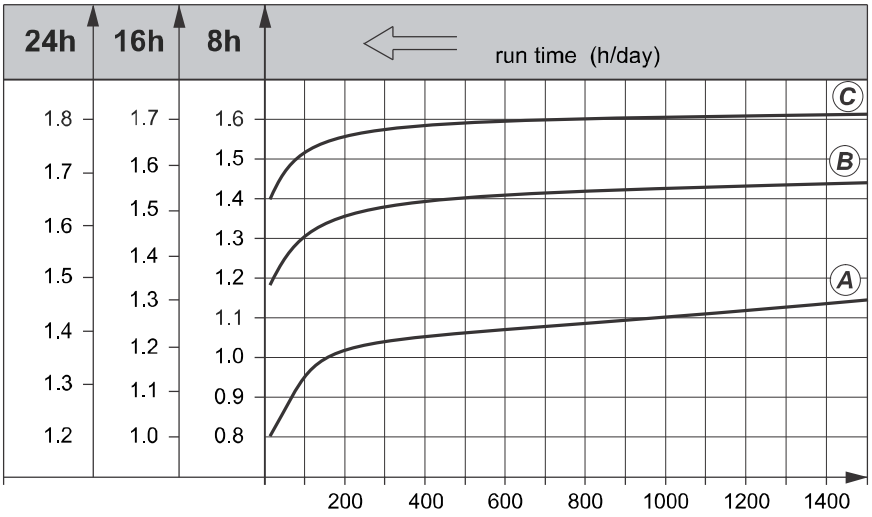

Fig.: Fattore di servizio (f_s)
Fig: Service factor (f_s)

Frequenza d'avvio **Z** (1/h) #
start up frequency **Z** (1/h) #

 # frequenza d'avvio Z: il ciclo include tutti gli avvii e le fermate in funzione del cambio della velocità.

starting frequency **Z**: The cycles include all starting and braking procedures as well as change overs from low to high speed.

4.5.1 Classifica dei carichi

Ⓐ *Uniforme , con fattore di accelerazione* $f_a \leqslant 0.2$

Ⓑ *Carico di spunto moderato con fattore di accelerazione* $f_a \leqslant 3$

Ⓒ *Elevato carico di spunto con fattore di accelerazione* $f_a \leqslant 10$

Esempi di applicazioni:

- Nastri trasportatori;
- Ventilatori, linee di assemblaggio, trasportatori a nastro, piccoli mescolatori, macchine per pulizia, macchine a controllo;
- Avvolgitori ,Macchine lavorazione legno, ascensori, trasportatori per materiali pesanti, porte scorrevoli, macchine imballaggio, taglierine pompe piegatrici;
- Mescolatori per materiali pesanti, presse, cesoie mulini macinatori piegatrici buratti vibratori trituratori:

4.5.1 load classifications

Ⓐ Uniform, permitted mass acceleration factor $f_a \leqslant 0.2$

Ⓑ Moderate shock load, permitted mass acceleration factor $f_a \leqslant 3$

Ⓒ Heavy shock load, permitted mass acceleration factor $f_a \leqslant 10$

Load classifications:

Screw feeders for light materials, fans, assembly lines, conveyor belts for light materials, small mixers, lifts, cleaning machines, fillers, control machines.

Winding devices, woodworking machine feeders, goods lifts, balancers,threading machines, medium mixers, conveyor belts for heavy materials, winches, sliding doors, fertilizer scrapers, packing machines, concrete mixers, crane mechanisms, milling cutters, folding machines, gear pumps.

Mixers for heavy materials, shears, presses, centrifuges, rotating supports, winches and lifts for heavy materials, grinding lathes, stone mills, bucket elevators, drilling machines, hammer mills, cam presses, folding machines, turntables, tumbling barrels, vibrators, shredders.

4.5.2 Fattore di accellerazione

Viene calcolato nel seguente modo:

$$f_a = \frac{J_c}{J_m}$$

f_a *fattore di accelerazione*

J_c *momento di inerzia del carico* (kgm^2)

J_m *momento di inerzia del motore* (kgm^2)

Nel caso il fattore di accelerazione risultasse $f_a > 10$, *interpellare il nostro ufficio tecnico*

Per ottenere una lunga durata del riduttore il fattore di servizio f_s *selezionato dal catalogo deve essere uguale o meglio più alto di quello necessario, ottenuto tramite il diagramma descritto nella pagina precedente.*

ESEMPIO:

Con fattore di accelerazione di 2,5 tipo Ⓑ *un servizio* f_s =1.48。*e 200 cicli /ora, risulta che serve un fattore di servizio* $f_s \geqslant 1.48$

4.5.2 Mass acceleration factor

The mass acceleration factor is calculated as follows:

$$f_a = \frac{J_c}{J_m}$$

f_a Mass acceleration factor

J_c All external mass moments of inertia (kgm^2)

J_m Mass moment of inertia on the motor end (kgm^2)

If mass acceleration factors $f_a > 10$, please call our Technical Service.

To keep the service-life of gear units, the use factor f_s selected from the catalogue must be equal or slightly higher than the calculated use factor f_s.

Example:

Mass acceleration factor 2.5 (load classification Ⓑ), 14 hours/day operating time (read off at 16 h/d) and 200 cycles/hour result in a service factor f_s =1.48.

choose the service factor f_s = 1.48 according to the parameter sheet .

4.6 Sovraccarico e carichi assiali

Gli alberi in entrata e in uscita dei riduttori possono essere soggetti a dei carichi radiali esterni, causati dal tipo di trasmissione in uso. Il reale valore dei carichi radiali esterni può essere calcolato utilizzando la formula:

4.6 Overhung loads and axial forces

When determining the resulting radial loads, the type of transmission elements, mounted on the shaft end must be considered. Various transmission elements are corresponding with following transmission element factors f_z:

Transmission element	Transmission element factor F_z	Comments
Ingranaggi - Gears	1.00	< 17 teeth
Pignone catena - Chain sprockets	1.25	< 20 teeth
	1.40	< 13 teeth
V Puleggia -Narrow V-belt pulleys	1.75	Influence of the tensile force
Puleggia - Flat belt pulleys	2.50	Influence of the tensile force
Puleggia - Toothed belt pulleys	2.50	Influence of the tensile force

I sovraccarichi esercitati sull'albero sono calcolati come segue:

$$F_r = \frac{M \cdot 2000 \cdot f_z}{d_0} \text{ [N]}$$

F_r *Carico Radiale* [N]
M *Forza sull' albero* [Nm]
d_0 *Diametro degli elementi di trasmissione montati in* [mm]
f_z *Coefficiente che dipende dal tipo di trasmissione*

The overhung loads exerted on the motor or gear shaft is then calculated as follows:

$$F_r = \frac{M \cdot 2000 \cdot f_z}{d_0} \text{ [N]}$$

F_r Resulting radial load [N]
M Torque on the shaft [Nm]
d_0 Mean diameter of the mounted transmission element in [mm]
f_z Transmission element factor

Il carico radiale permesso sull'albero vene calcolato con la seguente formula:

$$F \times L \leq \frac{F_{r2} \cdot a}{(b+x)} \text{ [M]}$$

F_{r2} *è il sovraccarico permesso (X=L/2) per un momtaggio a piedi*
a,b *costanti del riduttore, ricavabili dalle tabelle qui di seguito riportate*
x *distanza del punto di applicazione del carico dello spallamento dell'albero*

the maximum radial load on the shaft is calculated with the following

$$F \times L \leq \frac{F_{r2} \cdot a}{(b+x)} \text{ [M]}$$

F_{r2} is the maximum overload permitted (X=L/2) for a feet mounting
a,b are constant of the gearbox (see the tables)
x is the distance between the point in which the load is applied and the shaft shoulder

DRC *Costanti del riduttore* / Gear unit constantsfor overhung load conversion:

	DRC01	DRC02	DRC03	DRC04	DRC05	
a	103	116.5	130	147	147	
b	83	91.5	100	112	112	

Carichi radiali sull'albero in uscita / **Output shafts radial loads**

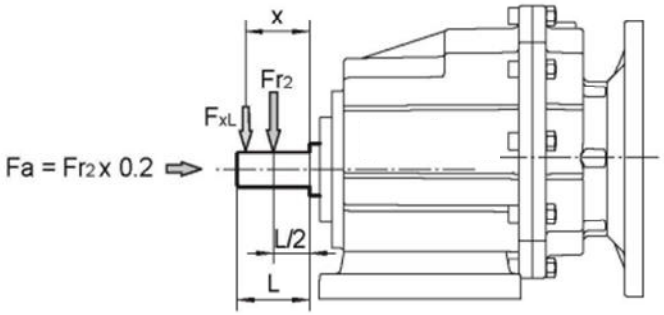

4.7 SELECTION TABLES COMMENTS - *TABELLE DI SELEZIONE*

P_{1n} [kW]	n_2 [r/min]	M_{2n} [Nm]	i	F_{r2} [N]	f_s		Page		Page

Possibili combinazioni con motore

Non e' possibile alcuna combinazione con il motore

* *rapporto di riduzione finito del riduttore*

P_{1n} *potenza in ingresso del motore* **[kW]**;

n_2 *velocita' in uscita* **[r/min]**;

M_{2n} *coppia in uscita* **[Nm]**;

$M_{2\,max}$ *massimo carico radiale in uscita* **[Nm]**;

F_{r2} *massimo carico radiale in uscita* **[N]**;

i *rapporto nominale*

i_a *rapporto di riduzione reale*

f_s *fattore di servizio*

tipo di riduttore

tipo di motore

page *Pagina dimensioni*

Combination with the motor in the header row **is possible**

Combination with the motor in the header row **is not possible**

* Finite gear unit reduction ratio;

P_{1n} Rated power driving motor **[kW]**;

n_2 Output speed **[r/min]**;

M_{2n} Output torque **[Nm]**;

$M_{2\,max}$ Max. permissible output torque **[Nm]**

F_{r2} Permissible overhung load output side **[N]**

i Gear unit nominal ratio;

i_a Gear unit actual ratio;

f_s Service factor;

Gear unit type;

Motor type;

Page Dimension sheet page no;

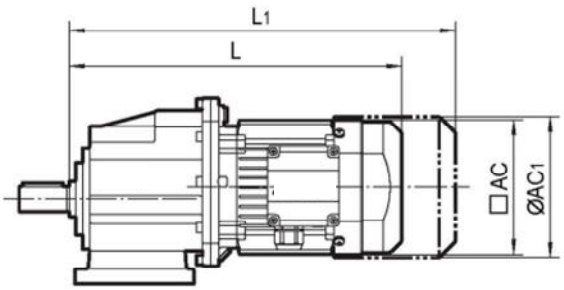

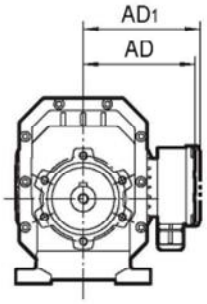

L Total length of gearmotor; - *Lunghezza totale del riduttore*

L1 Total length of gearmotor including brake; - *Lunghezza totale del riduttore incluso il freno*

AC Diameter of motor; - *Diametro del motore*

AC1 Diameter of brake motor; - *Diametro del freno del motore*

AD Center of motor shaft to top part of terminal box; - *Centraggio dell'albero del motore sino al coprimorsettiera*

AD1 Center of brake motor shaft to top part of terminal box. - *Centraggio del freno del motore sino al coprimorsettiera*

5. SELECTION EXAMPLE - *Esempi di selezione*

5.1 EXAMPLE 1 - ESEMPIO 1

Example: the required torque on driven machine is 400nM, works for 6 hours per day. Uniform shock load, start-up frequency is 400 times per hours, Ø200mm output flange-mounted, n2=30 r/min.
See table, fs=1.05

Esempio: la coppia richiesta è 400Nm. Lavora per 6 ore al giorno con carichi uniformi. La frequenza d'avvio è di 400 volte all'ora. La flangia in uscita montata è Ø200mm e n2=30 r/min.
Vedere la tabella, fs=1.05

$$M_{2n} \geqslant M_2 \cdot f_s = 400 \times 1.05 = 420[Nm]$$

$$i = \frac{n_1}{n_2} = \frac{1400}{30} = 46.67$$

Choose type:

DRCF04 II - P90B5 - 44.18

5.2 EXAMPLE 1 - ESEMPIO 1

Example: the required power on driven machine is 1kW, works for 8 hours per day. Moderate shock load, start-up continously, M6 foot-mounted, n2=95 r/min.
See table, fs=1.35

Esempio: la potenza richiesta è 1kW. Lavora per 8 ore al giorno con carichi moderati. Avvi continui, posizione di montaggio M6 a piedi e n2=95 r/min.
Vedere la tabella, fs=1.35

$$i = \frac{n_1}{n_2} = \frac{1400}{95} = 14.74$$

$$P_{1n} \geq P_1 \cdot f_s = \frac{P_2}{\eta} \cdot f_s = \frac{1}{0.96} \times 1.35 = 1.41[kW]$$

Choose type:

DRC02 - P90B5 - 14.81 - M6 - 1.5-4

6. GEAR UNIT SELECTION TABLES - *TABELLA DI SELEZIONE*

6.1 Possible geometrical combinations - *Possibili combinazioni geometriche*

DRC0001.. n_1 = 1400 r/min **120Nm**

n_2 [r/min]	M_2max [Nm]	Fr_2 [N]	i		MX63.. 63B5	MX71.. 71B5/B14	MX80.. 80B5/B14	MX90.. 90B5/B14
26	120	2600	53.33	160 / 3				
31	120	2600	45.89	413 / 9				
35	120	2600	40.10	3248 / 81				
39	120	2560	35.47	532 / 15				
49	120	2380	28.50	770 / 27				
59	120	2230	23.56	212 / 9				
71	120	2100	19.83	119 / 6				
78	90	2030	17.86	1357 / 76				
96	120	1900	14.62	658 / 45				
101	90	1860	13.80**	69 / 5				
118	120	1770	11.90	2464 / 207				
143	120	1660	9.81	1148 / 117				
153	80	1630	9.17 *	1219 / 133				
181	80	1540	7.72	1173 / 152				
246	70	1390	5.69 *	1081 / 190				
302	70	1290	4.63	88 / 19				
366	70	1210	3.82 *	943 / 247				

DRC0002.. n_1 = 1400 r/min **200Nm**

n_2 [r/min]	M_2max [Nm]	Fr_2 [N]	i		MX63.. 63B5	MX71.. 71B5/B14	MX80.. 80B5/B14	MX90.. 90B5/B14
26	200	4500	54.00	54 / 1				
30	200	4500	46.46	3717 / 80				
34	200	4500	40.60	203 / 5				
39	200	4270	35.91	3591 / 100				
48	200	3970	28.88	231 / 8				
59	200	3730	23.85	477 / 20				
70	200	3520	20.08	3213 / 160				
82	140	3330	17.10	3009 / 176				
95	200	3180	14.81	2961 / 200				
106	140	3060	13.21*	2907 / 220				
116	200	2970	12.05	1386 / 115				
141	200	2780	9.93	2583 / 260				
159	120	2670	8.78 *	2703 / 308				
189	120	2520	7.39	2601 / 352				
257	100	2280	5.45 *	2397 / 440				
316	100	2120	4.43	102 / 23				
383	80	1990	3.66 *	2091 / 572				

* Solo su richiesta - *Only on request*

DRC03..3.. n_1=1400 r/min 300Nm

n_2 [r/min]	M_2max [Nm]	Fr_2 [N]	i		MX71.. 71B5/B14	MX80.. 80B5/B14	MX90.. 90B5/B14	MX100.. 100B5/B14	MX112.. 112B5/B14
24	300	6000	58.09	639 / 11					
28	300	6000	50.02	2201 / 44					
32	300	6000	43.75	4331 / 99					
36	300	6000	38.73	426 / 11					
40	300	5860	34.62	4189 / 121					
49	300	5480	28.30	4047 / 143					
64	280	5020	21.78	1917 / 88					
81	280	4660	17.33	3621 / 209					
93	260	4440	15.06 *	497 / 33					
113	260	4160	12.37	1633 / 132					
136	240	3910	10.28	3053 / 297					
177	180	3590	7.93	1269 / 160					
222	180	3320	6.31 *	2397 / 380					
255	150	3170	5.48	329 / 60					
311	150	2970	4.50 *	1081 / 240					
374	150	2790	3.74 *	2021 / 540					

DRC04..4.. n_1=1400 r/min 500Nm

n_2 [r/min]	M_2max [Nm]	Fr_2 [N]	i		MX80.. 80B5/B14	MX90.. 90B5/B14	MX100.. 100B5/B14	MX112.. 112B5/B14
24	500	8000	58.09	639 / 11				
28	500	8000	50.02	2201 / 44				
32	500	8000	43.75	4331 / 99				
36	500	8000	38.73	426 / 11				
40	500	7950	34.62	4189 / 121				
49	500	7430	28.30	4047 / 143				
64	480	6810	21.78	1917 / 88				
81	480	6310	17.33	3621 / 209				
93	460	6020	15.06 *	497 / 33				
113	460	5640	12.37	1633 / 132				
136	440	5300	10.28	3053 / 297				
177	260	4860	7.93	1269 / 160				
222	260	4510	6.31 *	2397 / 380				
255	230	4300	5.48	329 / 60				
311	230	4030	4.50 *	1081 / 240				
374	200	3780	3.74 *	2021 / 540				

* Solo su richiesta - *Only on request*

DRC004.. n_1=1400 r/min **820Nm**

n_2 [r/min]	M_2max [Nm]	Fr_2 [N]	i		MX80.. 80B5/B14	MX90.. 90B5/B14	MX100.. 100B5/B14	MX112.. 112B5/B14
24	500	8000	58.09	639 / 11				
28	500	8000	50.02	2201 / 44				
32	500	8000	43.75	4331 / 99				
36	500	8000	38.73	426 / 11				
40	500	7950	34.62	4189 / 121				
49	500	7430	28.30	4047 / 143				
64	480	6810	21.78	1917 / 88				
81	480	6310	17.33	3621 / 209				
93	460	6020	15.06 *	497 / 33				
113	460	5640	12.37	1633 / 132				
136	440	5300	10.28	3053 / 297				
177	260	4860	7.93	1269 / 160				
222	260	4510	6.31 *	2397 / 380				
255	230	4300	5.48	329 / 60				
311	230	4030	4.50 *	1081 / 240				
374	200	3780	3.74 *	2021 / 540				

* Solo su richiesta - *Only on request*

6.2 DRC..P(IEC).. Performance parameter

P_{1n} [kW]	n_2 [r/min]	M_{2n} [Nm]	i	F_{r2} [N]	fs			Page				Page
0.12	26	42	53.33	2600	2.9	**DRC01**	**MX63S4**	33	**DRC01**	**63B5**	**6314**	34
	31	36	45.89	2600	3.3	**DRCF01**	**MX63S4**	33	**DRCF01**	**63B5**	**6314**	34
	35	32	40.10	2600	3.8	**DRCZ01**	**MX63S4**	33	**DRCZ01**	**63B5**	**6314**	34
	39	28	35.47	2560	4.3							
	49	22	28.50	2380	5.4							
	59	18.5	23.56	2230	6.5							
	71	15.6	19.83	2100	7.7							
	78	14.0	17.86	2030	6.4							
	96	11.5	14.62	1900	10.4							
	101	10.8	13.80*	1860	8.3							
	118	9.4	11.90	1770	12.8							
	143	7.7	9.81	1660	15.6							
	153	7.2	9.17	1630	11.1							
	181	6.1	7.72	1540	13.2							
	246	4.5	5.69	1390	15.7							
	302	3.6	4.63	1290	19.2							
	366	3.0	3.82	1210	23.3							
	16.9	65	53.33	2600	1.8	**DRC01**	**MX63M6**	33	**DRC01**	**63B5**	**6326**	34
	19.6	56	45.89	2600	2.1	**DRCF01**	**MX63M6**	33	**DRCF01**	**63B5**	**6326**	34
	22	49	40.10	2600	2.4	**DRCZ01**	**MX63M6**	33	**DRCZ01**	**63B5**	**6326**	34
	25	43	35.47	2560	2.8							
	32	35	28.50	2380	3.4							
	38	29	23.56	2230	4.2							
	45	24	19.83	2100	5.0							
	50	22	17.86	2030	4.1							
	62	17.9	14.62	1900	6.7							
	65	16.9	13.80*	1860	5.3							
	76	14.5	11.90	1770	8.2							
	92	12.0	9.81	1660	10.0							
	98	11.2	9.17	1630	7.1							
	117	9.4	7.72	1540	8.5							
	158	7.0	5.69	1390	10.1							
	194	5.7	4.63	1290	12.4							
	236	4.7	3.82	1210	15.0							
0.18	26	63	53.33	2600	1.9	**DRC01**	**MX63M4**	33	**DRC01**	**63B5**	**6324**	34
	31	54	45.89	2600	2.2	**DRCF01**	**MX63M4**	33	**DRCF01**	**63B5**	**6324**	34
	35	47	40.10	2600	2.5	**DRCZ01**	**MX63M4**	33	**DRCZ01**	**63B5**	**6324**	34
	39	42	35.47	2560	2.9							
	49	34	28.50	2380	3.6							
	59	28	23.56	2230	4.3							
	71	23	19.83	2100	5.1							
	78	21	17.86	2030	4.3							
	96	17.2	14.62	1900	7.0							
	101	16.3	13.80*	1860	5.5							
	118	14.0	11.90	1770	8.6							
	143	11.6	9.81	1660	10.4							
	153	10.8	9.17	1630	7.4							
	181	9.1	7.72	1540	8.8							
	246	6.7	5.69	1390	10.4							
	302	5.5	4.63	1290	12.8							
	366	4.5	3.82	1210	15.5							
	16.9	98	53.33	2600	1.2	**DRC01**	**MX63L6**	33	**DRC01**	**71B5/B14**	**7116**	34
	19.6	84	45.89	2600	1.4	**DRCF01**	**MX63L6**	33	**DRCF01**	**71B5/B14**	**7116**	34
	22	74	40.10	2600	1.6	**DRCZ01**	**MX63L6**	33	**DRCZ01**	**71B5/B14**	**7116**	34
	25	65	35.47	2600	1.8							
	32	52	28.50	2600	2.3							
	38	43	23.56	2580	2.8							
	45	36	19.83	2440	3.3							
	50	33	17.86	2360	2.7							

P_{1n} [kW]	n_2 [r/min]	M_{2n} [Nm]	i	F_{r2} [N]	fs		Page		Page
0.18	26	64	54.00*	4500	3.1	**DRC02 MX63M4**	36	**DRC02 63B5 6324**	37
	30	55	46.46*	4500	3.7	**DRCF02 MX63M4**	36	**DRCF02 63B5 6324**	37
	34	48	40.60*	4500	4.2	**DRCZ02 MX63M4**	36	**DRCZ02 63B5 6324**	37
	39	42	35.91*	4270	4.7				
	16.7	99	54.00*	4500	2.0	**DRC02 MX63L6**	36	**DRC02 71B5/B14 7116**	37
	19.4	85	46.46*	4500	2.3	**DRCF02 MX63L6**	36	**DRCF02 71B5/B14 7116**	37
	22	74	40.60*	4500	2.7	**DRCZ02 MX63L6**	36	**DRCZ02 71B5/B14 7116**	37
	25	66	35.91*	4500	3.0				
	31	53	28.88*	4500	3.8				
0.25	26	87	53.33	2600	1.4	**DRC01 MX63L4**	33	**DRC01 71B5/B14 7114**	34
	31	75	45.89	2600	1.6	**DRCF01 MX63L4**	33	**DRCF01 71B5/B14 7114**	34
	35	66	40.10	2600	1.8	**DRCZ01 MX63L4**	33	**DRCZ01 71B5/B14 7114**	34
	39	58	35.47	2560	2.1				
	49	47	28.50	2380	2.6				
	59	39	23.56	2230	3.1				
	71	32	19.83	2100	3.7				
	78	29	17.86	2030	3.1				
	96	24	14.62	1900	5.0				
	101	23	13.80*	1860	4.0				
	118	19.5	11.90	1770	6.2				
	143	16.1	9.81	1660	7.5				
	153	15.0	9.17	1630	5.3				
	181	12.6	7.72	1540	6.3				
	246	9.3	5.69	1390	7.5				
	302	7.6	4.63	1290	9.2				
	366	6.3	3.82	1210	11.2				
	16.9	136	53.33	2600	0.88	**DRC01 MX71D6**	33	**DRC01 71B5/B14 7126**	34
	19.6	117	45.89	2600	1.0	**DRCF01 MX71D6**	33	**DRCF01 71B5/B14 7126**	34
	22	102	40.10	2600	1.2	**DRCZ01 MX71D6**	33	**DRCZ01 71B5/B14 7126**	34
	25	90	35.47	2600	1.3				
	32	73	28.50	2600	1.7				
	38	60	23.56	2580	2.0				
	45	51	19.83	2440	2.4				
	50	45	17.86	2360	2.0				
	62	37	14.62	2200	3.2				
	65	35	13.80*	2160	2.6				
	76	30	11.90	2060	4.0				
	92	25	9.81	1930	4.8				
	98	23	9.17	1890	3.4				
	117	19.7	7.72	1780	4.1				
	158	14.5	5.69	1610	4.8				
	194	11.8	4.63	1500	5.9				
	236	9.7	3.82	1410	7.2				
	26	88	54.00*	4500	2.3	**DRC02 MX63L4**	36	**DRC02 71B5/B14 7114**	37
	30	76	46.46*	4500	2.6	**DRCF02 MX63L4**	36	**DRCF02 71B5/B14 7114**	37
	34	66	40.60*	4500	3.0	**DRCZ02 MX63L4**	36	**DRCZ02 71B5/B14 7114**	37
	39	59	35.91*	4270	3.4				
	16.7	138	54.00*	4500	1.5	**DRC02 MX71D6**	36	**DRC02 71B5/B14 7126**	37
	19.4	118	46.46*	4500	1.7	**DRCF02 MX71D6**	36	**DRCF02 71B5/B14 7126**	37
	22	103	40.60*	4500	1.9	**DRCZ02 MX71D6**	36	**DRCZ02 71B5/B14 7126**	37
	25	91	35.91*	4500	2.2				
	31	74	28.88*	4500	2.7				

P_{1n} [kW]	n_2 [r/min]	M_{2n} [Nm]	i	F_{r2} [N]	fs		Page		Page
0.37	26	129	53.33	2600	0.93	**DRC01 MX71D4**	33	**DRC01 71B5/B14 7124**	34
	31	111	45.89	2600	1.1	**DRCF01 MX71D4**	33	**DRCF01 71B5/B14 7124**	34
	35	97	40.10	2600	1.2	**DRCZ01 MX71D4**	33	**DRCZ01 71B5/B14 7124**	34
	39	86	35.47	2560	1.4				
	49	69	28.50	2380	1.7				
	59	57	23.56	2230	2.1				
	71	48	19.83	2100	2.5				
	78	43	17.86	2030	2.1				
	96	35	14.62	1900	3.4				
	101	33	13.80*	1860	2.7				
	118	29	11.90	1770	4.2				
	143	24	9.81	1660	5.0				
	153	22	9.17	1630	3.6				
	181	18.7	7.72	1540	4.3				
	246	13.8	5.69	1390	5.1				
	302	11.2	4.63	1290	6.2				
	366	9.3	3.82	1210	7.6				
	25	134	35.47	2600	0.90	**DRC01 MX80K6**	33	**DRC01 80B5/B14 8016**	34
	32	107	28.50	2600	1.1	**DRCF01 MX80K6**	33	**DRCF01 80B5/B14 8016**	34
	38	89	23.56	2580	1.4	**DRCZ01 MX80K6**	33	**DRCZ01 80B5/B14 8016**	34
	45	75	19.83	2440	1.6				
	50	67	17.86	2360	1.3				
	62	55	14.62	2200	2.2				
	65	52	13.80*	2160	1.7				
	76	45	11.90	2060	2.7				
	92	37	9.81	1930	3.2				
	98	35	9.17	1890	2.3				
	117	29	7.72	1780	2.7				
	26	131	54.00*	4500	1.5	**DRC02 MX71D4**	36	**DRC02 71B5/B14 7124**	37
	30	113	46.46*	4500	1.8	**DRCF02 MX71D4**	36	**DRCF02 71B5/B14 7124**	37
	34	98	40.60*	4500	2.0	**DRCZ02 MX71D4**	36	**DRCZ02 71B5/B14 7124**	37
	39	87	35.91*	4270	2.3				
	48	70	28.88*	3970	2.9				
	59	58	23.85*	3730	3.5				
	70	49	20.08*	3520	4.1				
	82	41	17.10	3330	3.4				
	95	36	14.81*	3180	5.6				
	16.7	204	54.00*	4500	1.0	**DRC02 MX80K6**	36	**DRC02 80B5/B14 8016**	37
	19.4	175	46.46*	4500	1.1	**DRCF02 MX80K6**	36	**DRCF02 80B5/B14 8016**	37
	22	153	40.60*	4500	1.3	**DRCZ02 MX80K6**	36	**DRCZ02 80B5/B14 8016**	37
	25	135	35.91*	4500	1.5				
	31	109	28.88*	4500	1.8				
	38	90	23.85*	4320	2.2				
	45	76	20.08*	4080	2.6				
	53	64	17.10	3860	2.2				
	68	50	13.21	3550	2.8				
	24	141	58.09	6000	2.1	**DRC03 MX71D4**	39	**DRC03 71B5 7124**	40
	28	121	50.02	6000	2.5	**DRCF03 MX71D4**	39	**DRCF03 71B5 7124**	40
	32	106	43.75	6000	2.8	**DRCZ03 MX71D4**	39	**DRCZ03 71B5 7124**	40
	36	94	38.73	6000	3.2				
	40	84	34.62	5860	3.6				
	15.5	219	58.09	6000	1.4	**DRC03 MX80K6**	39	**DRC03 80B5/B14 8016**	40
	18.0	189	50.02	6000	1.6	**DRCF03 MX80K6**	39	**DRCF03 80B5/B14 8016**	40
	21	165	43.75	6000	1.8	**DRCZ03 MX80K6**	39	**DRCZ03 80B5/B14 8016**	40
	23	146	38.73	6000	2.1				
	26	130	34.62	6000	2.3				
	32	107	28.30	6000	2.8				
	41	82	21.78	5820	3.4				

P_{1n} [kW]	n_2 [r/min]	M_{2n} [Nm]	i	F_{r2} [N]	fs		Page		Page
0.55	53	96	53.33	2320	1.2	**DRC01 MX71D2**	33	**DRC01 71B5/B14 7122**	34
	61	83	45.89	2210	1.5	**DRCF01 MX71D2**	33	**DRCF01 71B5/B14 7122**	34
	70	72	40.10	2110	1.7	**DRCZ01 MX71D2**	33	**DRCZ01 71B5/B14 7122**	34
	79	64	35.47	2030	1.9				
	98	51	28.50	1880	2.3				
	119	42	23.56	1770	2.8				
	141	36	19.83	1670	3.4				
	157	32	17.86	1610	2.8				
	203	25	13.80*	1480	3.6				
	39	128	35.47	2560	0.94	**DRC01 MX80K4**	33	**DRC01 80B5/B14 8014**	34
	49	103	28.50	2380	1.2	**DRCF01 MX80K4**	33	**DRCF01 80B5/B14 8014**	34
	59	85	23.56	2230	1.4	**DRCZ01 MX80K4**	33	**DRCZ01 80B5/B14 8014**	34
	71	71	19.83	2100	1.7				
	78	64	17.86	2030	1.4				
	96	53	14.62	1900	2.3				
	101	50	13.80*	1860	1.8				
	118	43	11.90	1770	2.8				
	143	35	9.81	1660	3.4				
	153	33	9.17	1630	2.4				
	181	28	7.72	1540	2.9				
	246	20	5.69	1390	3.4				
	302	16.7	4.63	1290	4.2				
	366	13.8	3.82	1210	5.1				
	38	132	23.56	2580	0.91	**DRC01 MX80N6**	33	**DRC01 80B5/B14 8026**	34
	45	111	19.83	2440	1.1	**DRCF01 MX80N6**	33	**DRCF01 80B5/B14 8026**	34
	62	82	14.62	2200	1.5	**DRCZ01 MX80N6**	33	**DRCZ01 80B5/B14 8026**	34
	65	77	13.80*	2160	1.2				
	76	67	11.90	2060	1.8				
	92	55	9.81	1930	2.2				
	98	51	9.17	1890	1.6				
	117	43	7.72	1780	1.8				
	158	32	5.69	1610	2.2				
	194	26	4.63	1500	2.7				
	236	21	3.82	1410	3.3				
	52	97	54.00*	3880	2.1	**DRC02 MX71D2**	36	**DRC02 71B5/B14 7122**	37
	60	84	46.46*	3690	2.4	**DRCF02 MX71D2**	36	**DRCF02 71B5/B14 7122**	37
	69	73	40.60*	3530	2.7	**DRCZ02 MX71D2**	36	**DRCZ02 71B5/B14 7122**	37
	78	65	35.91*	3390	3.1				
	97	52	28.88*	3150	3.8				
	26	194	54.00*	4500	1.0	**DRC02 MX80K4**	36	**DRC02 80B5/B14 8014**	37
	30	167	46.46*	4500	1.2	**DRCF02 MX80K4**	36	**DRCF02 80B5/B14 8014**	37
	34	146	40.60*	4500	1.4	**DRCZ02 MX80K4**	36	**DRCZ02 80B5/B14 8014**	37
	39	129	35.91*	4270	1.5				
	48	104	28.88*	3970	1.9				
	59	86	23.85*	3730	2.3				
	70	72	20.08*	3520	2.8				
	82	62	17.10	3330	2.3				
	95	53	14.81*	3180	3.7				
	106	48	13.21	3060	2.9				
	22	227	40.60*	4500	0.88	**DRC02 MX80N6**	36	**DRC02 80B5/B14 8026**	37
	25	201	35.91*	4500	1.0	**DRCF02 MX80N6**	36	**DRCF02 80B5/B14 8026**	37
	31	162	28.88*	4500	1.2	**DRCZ02 MX80N6**	36	**DRCZ02 80B5/B14 8026**	37
	38	134	23.85*	4320	1.5				
	45	113	20.08*	4080	1.8				
	53	96	17.10	3860	1.5				
	61	83	14.81*	3680	2.4				
	68	74	13.21	3550	1.9				
	103	49	8.78	3090	2.4				

P_{1n} [kW]	n_2 [r/min]	M_{2n} [Nm]	i	F_{r2} [N]	fs		Page		Page
0.55	24	209	58.09	6000	1.4	**DRC03 MX80K4**	39	**DRC03 80B5/B14 8014**	40
	28	180	50.02	6000	1.7	**DRCF03 MX80K4**	39	**DRCF03 80B5/B14 8014**	40
	32	158	43.75	6000	1.9	**DRCZ03 MX80K4**	39	**DRCZ03 80B5/B14 8014**	40
	36	139	38.73	6000	2.2				
	40	125	34.62	5860	2.4				
	49	102	28.30	5480	2.9				
	64	78	21.78	5020	3.6				
	81	62	17.33	4660	4.5				
	15.5	325	58.09	6000	0.92	**DRC03 MX80N6**	39	**DRC03 80B5/B14 8026**	40
	18.0	280	50.02	6000	1.1	**DRCF03 MX80N6**	39	**DRCF03 80B5/B14 8026**	40
	21	245	43.75	6000	1.2	**DRCZ03 MX80N6**	39	**DRCZ03 80B5/B14 8026**	40
	23	217	38.73	6000	1.4				
	26	194	34.62	6000	1.5				
	32	159	28.30	6000	1.9				
	41	122	21.78	5820	2.3				
	52	97	17.33	5400	2.9				
	60	84	15.06	5150	3.1				
	73	69	12.37	4820	3.8				
	24	209	58.09	8000	2.4	**DRC04 MX80K4**	42	**DRC04 80B5/B14 8014**	43
	28	180	50.02	8000	2.8	**DRCF04 MX80K4**	42	**DRCF04 80B5/B14 8014**	43
	32	158	43.75	8000	3.2	**DRCZ04 MX80K4**	42	**DRCZ04 80B5/B14 8014**	43
	36	139	38.73	8000	3.6				
	40	125	34.62	7950	4.0				
	15.5	325	58.09	8000	1.5	**DRC04 MX80N6**	42	**DRC04 80B5/B14 8026**	43
	18.0	280	50.02	8000	1.8	**DRCF04 MX80N6**	42	**DRCF04 80B5/B14 8026**	43
	21	245	43.75	8000	2.0	**DRCZ04 MX80N6**	42	**DRCZ04 80B5/B14 8026**	43
	23	217	38.73	8000	2.3				
	26	194	34.62	8000	2.6				
	32	159	28.30	8000	3.2				
	41	122	21.78	7890	3.9				
0.75	61	113	45.89	2210	1.1	**DRC01 MX80K2**	33	**DRC01 80B5/B14 8012**	34
	70	98	40.10	2110	1.2	**DRCF01 MX80K2**	33	**DRCF01 80B5/B14 8012**	34
	79	87	35.47	2030	1.4	**DRCZ01 MX80K2**	33	**DRCZ01 80B5/B14 8012**	34
	98	70	28.50	1880	1.7				
	119	58	23.56	1770	2.1				
	141	49	19.83	1670	2.5				
	157	44	17.86	1610	2.1				
	192	36	14.62	1510	3.3				
	203	34	13.80*	1480	2.7				
	59	116	23.56	2230	1.0	**DRC01 MX80N4**	33	**DRC01 80B5/B14 8024**	34
	71	97	19.83	2100	1.2	**DRCF01 MX80N4**	33	**DRCF01 80B5/B14 8024**	34
	78	88	17.86	2030	1.0	**DRCZ01 MX80N4**	33	**DRCZ01 80B5/B14 8024**	34
	96	72	14.62	1900	1.7				
	101	68	13.80*	1860	1.3				
	118	58	11.90	1770	2.1				
	143	48	9.81	1660	2.5				
	153	45	9.17	1630	1.8				
	181	38	7.72	1540	2.1				
	246	28	5.69	1390	2.5				
	302	23	4.63	1290	3.1				
	366	18.8	3.82	1210	3.7				
	62	112	14.62	2200	1.1	**DRC01 MX90S6**	33	**DRC01 90B5/B14 90S6**	34
	76	91	11.90	2060	1.3	**DRCF01 MX90S6**	33	**DRCF01 90B5/B14 90S6**	34
	92	75	9.81	1930	1.6	**DRCZ01 MX90S6**	33	**DRCZ01 90B5/B14 90S6**	34
	98	70	9.17	1890	1.1				

P_{1n} [kW]	n_2 [r/min]	M_{2n} [Nm]	i	F_{r2} [N]	fs		Page		Page
0.75	117	59	7.72	1780	1.4	**DRC01 MX90S6**	33	**DRC01 90B5/B14 90S6**	34
	158	43	5.69	1610	1.6	**DRCF01 MX90S6**	33	**DRCF01 90B5/B14 90S6**	34
	194	35	4.63	1500	2.0	**DRCZ01 MX90S6**	33	**DRCZ01 90B5/B14 90S6**	34
	236	29	3.82	1410	2.4				
	52	133	54.00*	3880	1.5	**DRC02 MX80K2**	36	**DRC02 80B5/B14 8012**	37
	60	114	46.46*	3690	1.8	**DRCF02 MX80K2**	36	**DRCF02 80B5/B14 8012**	37
	69	100	40.60*	3530	2.0	**DRCZ02 MX80K2**	36	**DRCZ02 80B5/B14 8012**	37
	78	88	35.91*	3390	2.3				
	97	71	28.88*	3150	2.8				
	117	59	23.85*	2960	3.4				
	139	49	20.08*	2790	4.1				
	164	42	17.10	2650	3.3				
	30	228	46.46*	4500	0.88	**DRC02 MX80N4**	36	**DRC02 80B5/B14 8024**	37
	34	199	40.60*	4500	1.0	**DRCF02 MX80N4**	36	**DRCF02 80B5/B14 8024**	37
	39	176	35.91*	4270	1.1	**DRCZ02 MX80N4**	36	**DRCZ02 80B5/B14 8024**	37
	48	142	28.88*	3970	1.4				
	59	117	23.85*	3730	1.7				
	70	99	20.08*	3520	2.0				
	82	84	17.10	3330	1.7				
	95	73	14.81*	3180	2.7				
	106	65	13.21	3060	2.2				
	116	59	12.05	2970	3.4				
	141	49	9.93	2780	4.1				
	159	43	8.78	2670	2.8				
	189	36	7.39	2520	3.3				
	257	27	5.45	2280	3.7				
	38	182	23.85*	4320	1.1	**DRC02 MX90S6**	36	**DRC02 90B5/B14 90S6**	37
	45	153	20.08*	4080	1.3	**DRCF02 MX90S6**	36	**DRCF02 90B5/B14 90S6**	37
	61	113	14.81*	3680	1.8	**DRCZ02 MX90S6**	36	**DRCZ02 90B5/B14 90S6**	37
	68	101	13.21	3550	1.4				
	75	92	12.05	3440	2.2				
	91	76	9.93	3220	2.6				
	103	67	8.78	3090	1.8				
	122	56	7.39	2920	2.1				
	165	42	5.45	2640	2.4				
	48	143	58.09	5530	2.1	**DRC03 MX80K2**	39	**DRC03 80B5/B14 8012**	40
	56	123	50.02	5260	2.4	**DRCF03 MX80K2**	39	**DRCF03 80B5/B14 8012**	40
	64	107	43.75	5030	2.8	**DRCZ03 MX80K2**	39	**DRCZ03 80B5/B14 8012**	40
	72	95	38.73	4830	3.2				
	81	85	34.62	4650	3.5				
	24	285	58.09	6000	1.1	**DRC03 MX80N4**	39	**DRC03 80B5/B14 8024**	40
	28	246	50.02	6000	1.2	**DRCF03 MX80N4**	39	**DRCF03 80B5/B14 8024**	40
	32	215	43.75	6000	1.4	**DRCZ03 MX80N4**	39	**DRCZ03 80B5/B14 8024**	40
	36	190	38.73	6000	1.6				
	40	170	34.62	5860	1.8				
	49	139	28.30	5480	2.2				
	64	107	21.78	5020	2.6				
	81	85	17.33	4660	3.3				
	93	74	15.06	4440	3.5				
	23	296	38.73	6000	1.0	**DRC03 MX90S6**	39	**DRC03 90B5/B14 90S6**	40
	26	264	34.62	6000	1.1	**DRCF03 MX90S6**	39	**DRCF03 90B5/B14 90S6**	40
	32	216	28.30	6000	1.4	**DRCZ03 MX90S6**	39	**DRCZ03 90B5/B14 90S6**	40
	41	166	21.78	5820	1.7				
	52	132	17.33	5400	2.1				
	60	115	15.06	5150	2.3				

P_{1n} [kW]	n_2 [r/min]	M_{2n} [Nm]	i	F_{r2} [N]	fs		Page		Page
0.75	73	95	12.37	4820	2.8	**DRC03 MX90S6**	39	**DRC03 90B5/B14 90S6**	40
	88	79	10.28	4530	3.1	**DRCF03 MX90S6**	39	**DRCF03 90B5/B14 90S6**	40
	113	61	7.93*	4160	3.0	**DRCZ03 MX90S6**	39	**DRCZ03 90B5/B14 90S6**	40
	143	48	6.31	3850	3.7				
	164	42	5.48	3670	3.6				
	24	285	58.09	8000	1.8	**DRC04 MX80N4**	42	**DRC04 80B5/B14 8024**	43
	28	246	50.02	8000	2.0	**DRCF04 MX80N4**	42	**DRCF04 80B5/B14 8024**	43
	32	215	43.75	8000	2.3	**DRCZ04 MX80N4**	42	**DRCZ04 80B5/B14 8024**	43
	36	190	38.73	8000	2.6				
	40	170	34.62	7950	2.9				
	49	139	28.30	7430	3.6				
	64	107	21.78	6810	4.5				
	15.5	444	58.09	8000	1.1	**DRC04 MX90S6**	42	**DRC04 90B5/B14 90S6**	43
	18.0	382	50.02	8000	1.3	**DRCF04 MX90S6**	42	**DRCF04 90B5/B14 90S6**	43
	21	334	43.75	8000	1.5	**DRCZ04 MX90S6**	42	**DRCZ04 90B5/B14 90S6**	43
	23	296	38.73	8000	1.7				
	26	264	34.62	8000	1.9				
	32	216	28.30	8000	2.3				
	41	166	21.78	7890	2.9				
	52	132	17.33	7310	3.6				
1.1	98	103	28.50	1880	1.2	**DRC01 MX80N2**	33	**DRC01 80B5/B14 8022**	34
	119	85	23.56	1770	1.4	**DRCF01 MX80N2**	33	**DRCF01 80B5/B14 8022**	34
	141	71	19.83	1670	1.7	**DRCZ01 MX80N2**	33	**DRCZ01 80B5/B14 8022**	34
	157	64	17.86	1610	1.4				
	192	53	14.62	1510	2.3				
	203	50	13.80*	1480	1.8				
	235	43	11.90	1410	2.8				
	285	35	9.81	1320	3.4				
	305	33	9.17	1290	2.4				
	363	28	7.72	1220	2.9				
	492	20	5.69	1100	3.4				
	605	16.7	4.63	1030	4.2				
	733	13.8	3.82	960	5.1				
	96	105	14.62	1900	1.1	**DRC01 MX90S4**	33	**DRC01 90B5/B14 90S4**	34
	118	86	11.90	1770	1.4	**DRCF01 MX90S4**	33	**DRCF01 90B5/B14 90S4**	34
	143	71	9.81	1660	1.7	**DRCZ01 MX90S4**	33	**DRCZ01 90B5/B14 90S4**	34
	153	66	9.17	1630	1.2				
	181	56	7.72	1540	1.4				
	246	41	5.69	1390	1.7				
	302	33	4.63	1290	2.1				
	366	28	3.82	1210	2.5				
	92	110	9.81	1930	1.1	**DRC01 MX90L6**	33	**DRC01 90B5/B14 90L6**	34
	117	87	7.72	1780	0.92	**DRCF01 MX90L6**	33	**DRCF01 90B5/B14 90L6**	34
	158	64	5.69	1610	1.1	**DRCZ01 MX90L6**	33	**DRCZ01 90B5/B14 90L6**	34
	194	52	4.63	1500	1.3				
	236	43	3.82	1410	1.6				
	52	194	54.00*	3880	1.0	**DRC02 MX80N2**	36	**DRC02 80B5/B14 8022**	37
	60	167	46.46*	3690	1.2	**DRCF02 MX80N2**	36	**DRCF02 80B5/B14 8022**	37
	69	146	40.60*	3530	1.4	**DRCZ02 MX80N2**	36	**DRCZ02 80B5/B14 8022**	37
	78	129	35.91*	3390	1.5				
	97	104	28.88*	3150	1.9				
	117	86	23.85*	2960	2.3				
	139	72	20.08*	2790	2.8				
	164	62	17.10	2650	2.3				
	189	53	14.81*	2520	3.7				
	212	48	13.21	2430	2.9				

P_{1n} [kW]	n_2 [r/min]	M_{2n} [Nm]	i	F_{r2} [N]	fs		Page		Page
1.1	48	208	28.88*	3970	0.96	**DRC02 MX90S4**	36	**DRC02 90B5/B14 90S4**	37
	59	172	23.85*	3730	1.2	**DRCF02 MX90S4**	36	**DRCF02 90B5/B14 90S4**	37
	70	145	20.08*	3520	1.4	**DRCZ02 MX90S4**	36	**DRCZ02 90B5/B14 90S4**	37
	95	107	14.81*	3180	1.9				
	106	95	13.21	3060	1.5				
	116	87	12.05	2970	2.3				
	141	72	9.93	2780	2.8				
	159	63	8.78	2670	1.9				
	189	53	7.39	2520	2.3				
	257	39	5.45	2280	2.5				
	316	32	4.43	2120	3.1				
	383	26	3.66	1990	3.0				
	61	166	14.81*	3680	1.2	**DRC02 MX90L6**	36	**DRC02 90B5/B14 90L6**	37
	75	135	12.05	3440	1.5	**DRCF02 MX90L6**	36	**DRCF02 90B5/B14 90L6**	37
	91	111	9.93	3220	1.8	**DRCZ02 MX90L6**	36	**DRCZ02 90B5/B14 90L6**	37
	103	98	8.78	3090	1.2				
	122	83	7.39	2920	1.4				
	165	61	5.45	2640	1.6				
	203	50	4.43	2460	2.0				
	246	41	3.66	2310	2.0				
	48	209	58.09	5530	1.4	**DRC03 MX80N2**	39	**DRC03 80B5/B14 8022**	40
	56	180	50.02	5260	1.7	**DRCF03 MX80N2**	39	**DRCF03 80B5/B14 8022**	40
	64	158	43.75	5030	1.9	**DRCZ03 MX80N2**	39	**DRCZ03 80B5/B14 8022**	40
	72	139	38.73	4830	2.2				
	81	125	34.62	4650	2.4				
	99	102	28.30	4350	2.9				
	129	78	21.78	3990	3.6				
	32	315	43.75	6000	0.95	**DRC03 MX90S4**	39	**DRC03 90B5/B14 90S4**	40
	36	279	38.73	6000	1.1	**DRCF03 MX90S4**	39	**DRCF03 90B5/B14 90S4**	40
	40	249	34.62	5860	1.2	**DRCZ03 MX90S4**	39	**DRCZ03 90B5/B14 90S4**	40
	49	204	28.30	5480	1.5				
	64	157	21.78	5020	1.8				
	81	125	17.33	4660	2.2				
	93	108	15.06	4440	2.4				
	113	89	12.37	4160	2.9				
	136	74	10.28	3910	3.2				
	177	57	7.93*	3590	3.2				
	222	45	6.31	3320	4.0				
	255	39	5.48	3170	3.8				
	311	32	4.50	2970	4.6				
	374	27	3.74	2790	5.6				
	32	317	28.30	6000	0.95	**DRC03 MX90L6**	39	**DRC03 90B5/B14 90L6**	40
	41	244	21.78	5820	1.1	**DRCF03 MX90L6**	39	**DRCF03 90B5/B14 90L6**	40
	52	194	17.33	5400	1.4	**DRCZ03 MX90L6**	39	**DRCZ03 90B5/B14 90L6**	40
	60	169	15.06	5150	1.5				
	73	139	12.37	4820	1.9				
	88	115	10.28	4530	2.1				
	113	89	7.93*	4160	2.0				
	143	71	6.31	3850	2.5				
	164	61	5.48	3670	2.4				
	200	50	4.50	3440	3.0				
	241	42	3.74	3230	3.6				
	48	209	58.09	7500	2.4	**DRC04 MX80N2**	42	**DRC04 80B5/B14 8022**	43
	56	180	50.02	7130	2.8	**DRCF04 MX80N2**	42	**DRCF04 80B5/B14 8022**	43
	64	158	43.75	6820	3.2	**DRCZ04 MX80N2**	42	**DRCZ04 80B5/B14 8022**	43
	72	139	38.73	6550	3.6				
	81	125	34.62	6310	4.0				

P_{1n} [kW]	n_2 [r/min]	M_{2n} [Nm]	i	F_{r2} [N]	fs	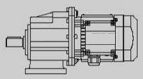	Page	 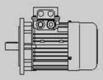	Page
1.1	24	418	58.09	8000	1.2	**DRC04 MX90S4**	42	**DRC04 90B5/B14 90S4**	43
	28	360	50.02	8000	1.4	**DRCF04 MX90S4**	42	**DRCF04 90B5/B14 90S4**	43
	32	315	43.75	8000	1.6	**DRCZ04 MX90S4**	42	**DRCZ04 90B5/B14 90S4**	43
	36	279	38.73	8000	1.8				
	40	249	34.62	7950	2.0				
	49	204	28.30	7430	2.5				
	64	157	21.78	6810	3.1				
	81	125	17.33	6310	3.8				
	93	108	15.06	6020	4.2				
	21	490	43.75	8000	1.0	**DRC04 MX90L6**	42	**DRC04 90B5/B14 90L6**	43
	23	434	38.73	8000	1.2	**DRCF04 MX90L6**	42	**DRCF04 90B5/B14 90L6**	43
	26	388	34.62	8000	1.3	**DRCZ04 MX90L6**	42	**DRCZ04 90B5/B14 90L6**	43
	32	317	28.30	8000	1.6				
	41	244	21.78	7890	2.0				
	52	194	17.33	7310	2.5				
	60	169	15.06	6980	2.7				
	73	139	12.37	6540	3.3				
	88	115	10.28	6150	3.8				
	113	89	7.93*	5640	2.9				
	143	71	6.31	5220	3.7				
	164	61	5.48	4980	3.7				
	24	418	58.09	8000	1.2	**DRC05 MX90S4**	45	**DRC05 TAM90 90S4**	46
	28	360	50.02	8000	1.4	**DRCF05 MX90S4**	45	**DRCF05 TAM90 90S4**	46
	32	315	43.75	8000	1.6	**DRCZ05 MX90S4**	45	**DRCZ05 TAM90 90S4**	46
	36	279	38.73	8000	1.8	***Albero in uscita Ø 40***		***Albero in uscita Ø 40***	
	40	249	34.62	7950	2.0	*Ouput shaft Ø 40*		*Ouput shaft Ø 40*	
	49	204	28.30	7430	2.5				
	64	157	21.78	6810	3.1				
	81	125	17.33	6310	3.8				
	93	108	15.06	6020	4.2				
	21	490	43.75	8000	1.0	**DRC05 MX90L6**	45	**DRC05 TAM90 90L6**	46
	23	434	38.73	8000	1.2	**DRCF05 MX90L6**	45	**DRCF05 TAM90 90L6**	46
	26	388	34.62	8000	1.3	**DRCZ05 MX90L6**	45	**DRCZ05 TAM90 90L6**	46
	32	317	28.30	8000	1.6	***Albero in uscita Ø 40***		***Albero in uscita Ø 40***	
	41	244	21.78	7890	2.0	*Ouput shaft Ø 40*		*Ouput shaft Ø 40*	
	52	194	17.33	7310	2.5				
	60	169	15.06	6980	2.7				
	73	139	12.37	6540	3.3				
	88	115	10.28	6150	3.8				
	113	89	7.93*	5640	2.9				
	143	71	6.31	5220	3.7				
	164	61	5.48	4980	3.7				
1.5	119	116	23.56	1770	1.0	**DRC01 MX90S2**	33	**DRC01 90B5/B14 90S2**	34
	141	97	19.83	1670	1.2	**DRCF01 MX90S2**	33	**DRCF01 90B5/B14 90S2**	34
	192	72	14.62	1510	1.7	**DRCZ01 MX90S2**	33	**DRCZ01 90B5/B14 90S2**	34
	203	68	13.80*	1480	1.3				
	235	58	11.90	1410	2.1				
	285	48	9.81	1320	2.5				
	305	45	9.17	1290	1.8				
	363	38	7.72	1220	2.1				
	492	28	5.69	1100	2.5				
	605	23	4.63	1030	3.1				
	733	18.8	3.82	960	3.7				

P_{1n} [kW]	n_2 [r/min]	M_{2n} [Nm]	i	F_{r2} [N]	fs		Page		Page
1.5	118	117	11.90	1770	1.0	**DRC01 MX90L4**	33	**DRC01 90B5/B14 90L4**	34
	143	96	9.81	1660	1.2	**DRCF01 MX90L4**	33	**DRCF01 90B5/B14 90L4**	34
	153	90	9.17	1630	0.89	**DRCZ01 MX90L4**	33	**DRCZ01 90B5/B14 90L4**	34
	181	76	7.72	1540	1.1				
	246	56	5.69	1390	1.3				
	302	45	4.63	1290	1.5				
	366	38	3.82	1210	1.9				
	69	199	40.60*	3530	1.0	**DRC02 MX90S2**	36	**DRC02 90B5/B14 90S2**	37
	78	176	35.91*	3390	1.1	**DRCF02 MX90S2**	36	**DRCF02 90B5/B14 90S2**	37
	97	142	28.88*	3150	1.4	**DRCZ02 MX90S2**	36	**DRCZ02 90B5/B14 90S2**	37
	117	117	23.85*	2960	1.7				
	139	99	20.08*	2790	2.0				
	189	73	14.81*	2520	2.7				
	212	65	13.21	2430	2.2				
	232	59	12.05	2350	3.4				
	282	49	9.93	2210	4.1				
	319	43	8.78	2120	2.8				
	379	36	7.39	2000	3.3				
	514	27	5.45	1810	3.7				
	95	145	14.81*	3180	1.4	**DRC02 MX90L4**	36	**DRC02 90B5/B14 90L4**	37
	116	118	12.05	2970	1.7	**DRCF02 MX90L4**	36	**DRCF02 90B5/B14 90L4**	37
	141	98	9.93	2780	2.1	**DRCZ02 MX90L4**	36	**DRCZ02 90B5/B14 90L4**	37
	159	86	8.78	2670	1.4				
	189	73	7.39	2520	1.7				
	257	54	5.45	2280	1.9				
	316	44	4.43	2120	2.3				
	383	36	3.66	1990	2.2				
	48	285	58.09	5530	1.1	**DRC03 MX90S2**	39	**DRC03 90B5/B14 90S2**	40
	56	246	50.02	5260	1.2	**DRCF03 MX90S2**	39	**DRCF03 90B5/B14 90S2**	40
	64	215	43.75	5030	1.4	**DRCZ03 MX90S2**	39	**DRCZ03 90B5/B14 90S2**	40
	72	190	38.73	4830	1.6				
	81	170	34.62	4650	1.8				
	99	139	28.30	4350	2.2				
	129	107	21.78	3990	2.6				
	162	85	17.33	3690	3.3				
	186	74	15.06	3530	3.5				
	40	340	34.62	5860	0.88	**DRC03 MX90L4**	39	**DRC03 90B5/B14 90L4**	40
	49	278	28.30	5480	1.1	**DRCF03 MX90L4**	39	**DRCF03 90B5/B14 90L4**	40
	64	214	21.78	5020	1.3	**DRCZ03 MX90L4**	39	**DRCZ03 90B5/B14 90L4**	40
	81	170	17.33	4660	1.6				
	93	148	15.06	4440	1.8				
	113	122	12.37	4160	2.1				
	136	101	10.28	3910	2.4				
	177	78	7.93*	3590	2.3				
	222	62	6.31	3320	2.9				
	255	54	5.48	3170	2.8				
	311	44	4.50	2970	3.4				
	374	37	3.74	2790	4.1				
	52	265	17.33	5400	1.1	**DRC03 MX100M6**	39	**DRC03 100B5/B14 100L6**	40
	60	230	15.06	5150	1.1	**DRCF03 MX100M6**	39	**DRCF03 100B5/B14 100L6**	40
	73	189	12.37	4820	1.4	**DRCZ03 MX100M6**	39	**DRCZ03 100B5/B14 100L6**	40
	88	157	10.28	4530	1.5				
	113	121	7.93*	4160	1.5				
	143	96	6.31	3850	1.9				
	164	84	5.48	3670	1.8				
	200	69	4.50	3440	2.2				
	241	57	3.74	3230	2.6				

P_{1n} [kW]	n_2 [r/min]	M_{2n} [Nm]	i	F_{r2} [N]	fs		Page		Page
1.5	48	285	58.09	7500	1.8	**DRC04 MX90S2**	42	**DRC04 90B5/B14 90S2**	43
	56	246	50.02	7130	2.0	**DRCF04 MX90S2**	42	**DRCF04 90B5/B14 90S2**	43
	64	215	43.75	6820	2.3	**DRCZ04 MX90S2**	42	**DRCZ04 90B5/B14 90S2**	43
	72	190	38.73	6550	2.6				
	81	170	34.62	6310	2.9				
	99	139	28.30	5900	3.6				
	24	571	58.09	8000	0.88	**DRC04 MX90L4**	42	**DRC04 90B5/B14 90L4**	43
	28	491	50.02	8000	1.0	**DRCF04 MX90L4**	42	**DRCF04 90B5/B14 90L4**	43
	32	430	43.75	8000	1.2	**DRCZ04 MX90L4**	42	**DRCZ04 90B5/B14 90L4**	43
	36	380	38.73	8000	1.3				
	40	340	34.62	7950	1.5				
	49	278	28.30	7430	1.8				
	64	214	21.78	6810	2.2				
	81	170	17.33	6310	2.8				
	93	148	15.06	6020	3.1				
	113	122	12.37	5640	3.8				
	136	101	10.28	5300	4.4				
	177	78	7.93*	4860	3.3				
	222	62	6.31	4510	4.2				
	255	54	5.48	4300	4.3				
	26	529	34.62	8000	0.95	**DRC04 MX100M6**	42	**DRC04 100B5/B14 100L6**	43
	32	432	28.30	8000	1.2	**DRCF04 MX100M6**	42	**DRCF04 100B5/B14 100L6**	43
	41	333	21.78	7890	1.4	**DRCZ04 MX100M6**	42	**DRCZ04 100B5/B14 100L6**	43
	52	265	17.33	7310	1.8				
	60	230	15.06	6980	2.0				
	73	189	12.37	6540	2.4				
	88	157	10.28	6150	2.8				
	113	121	7.93*	5640	2.1				
	143	96	6.31	5220	2.7				
	164	84	5.48	4980	2.7				
	200	69	4.50	4660	3.3				
	241	57	3.74	4390	3.5				
	48	285	58.09	7500	1.8	**DRC05 MX90S2**	45	**DRC05 TAM90 90S2**	46
	56	246	50.02	7130	2.0	**DRCF05 MX90S2**	45	**DRCF05 TAM90 90S2**	46
	64	215	43.75	6820	2.3	**DRCZ05 MX90S2**	45	**DRCZ05 TAM90 90S2**	46
	72	190	38.73	6550	2.6				
	81	170	34.62	6310	2.9	***Albero in uscita Ø 40***		***Albero in uscita Ø 40***	
	99	139	28.30	5900	3.6	*Ouput shaft Ø 40*		*Ouput shaft Ø 40*	
	24	571	58.09	8000	0.88	**DRC05 MX90L4**	45	**DRC05 TAM90 90L4**	46
	28	491	50.02	8000	1.0	**DRCF05 MX90L4**	45	**DRCF05 TAM90 90L4**	46
	32	430	43.75	8000	1.2	**DRCZ05 MX90L4**	45	**DRCZ05 TAM90 90L4**	46
	36	380	38.73	8000	1.3				
	40	340	34.62	7950	1.5	***Albero in uscita Ø 40***		***Albero in uscita Ø 40***	
	49	278	28.30	7430	1.8	*Ouput shaft Ø 40*		*Ouput shaft Ø 40*	
	64	214	21.78	6810	2.2				
	81	170	17.33	6310	2.8				
	93	148	15.06	6020	3.1				
	113	122	12.37	5640	3.8				
	136	101	10.28	5300	4.4				
	177	78	7.93*	4860	3.3				
	222	62	6.31	4510	4.2				
	255	54	5.48	4300	4.3				

P_{1n} [kW]	n_2 [r/min]	M_{2n} [Nm]	i	F_{r2} [N]	fs		Page		Page
1.5	26	529	34.62	8000	0.95	**DRC05 MX100M6**	45	**DRC05 TAM100 100L6**	46
	32	432	28.30	8000	1.2	**DRCF05 MX100M6**	45	**DRCF05 TAM100 100L6**	46
	41	333	21.78	7890	1.4	**DRCZ05 MX100M6**	45	**DRCZ05 TAM100 100L6**	46
	52	265	17.33	7310	1.8				
	60	230	15.06	6980	2.0	***Albero in uscita Ø 40***		***Albero in uscita Ø 40***	
	73	189	12.37	6540	2.4	*Ouput shaft Ø 40*		*Ouput shaft Ø 40*	
	88	157	10.28	6150	2.8				
	113	121	7.93*	5640	2.1				
	143	96	6.31	5220	2.7				
	164	84	5.48	4980	2.7				
	200	69	4.50	4660	3.3				
	241	57	3.74	4390	3.5				
2.2	97	208	28.88*	3150	0.96	**DRC02 MX90L2**	36	**DRC02 90B5/B14 90L2**	37
	117	172	23.85*	2960	1.2	**DRCF02 MX90L2**	36	**DRCF02 90B5/B14 90L2**	37
	139	145	20.08*	2790	1.4	**DRCZ02 MX90L2**	36	**DRCZ02 90B5/B14 90L2**	37
	189	107	14.81*	2520	1.9				
	212	95	13.21	2430	1.5				
	232	87	12.05	2350	2.3				
	282	72	9.93	2210	2.8				
	319	63	8.78	2120	1.9				
	379	53	7.39	2000	2.3				
	514	39	5.45	1810	2.5				
	632	32	4.43	1680	3.1				
	765	26	3.66	1580	3.0				
	64	315	43.75	5030	0.95	**DRC03 MX90L2**	39	**DRC03 90B5/B14 90L2**	40
	72	279	38.73	4830	1.1	**DRCF03 MX90L2**	39	**DRCF03 90B5/B14 90L2**	40
	81	249	34.62	4650	1.2	**DRCZ03 MX90L2**	39	**DRCZ03 90B5/B14 90L2**	40
	99	204	28.30	4350	1.5				
	129	157	21.78	3990	1.8				
	162	125	17.33	3690	2.2				
	186	108	15.06	3530	2.4				
	226	89	12.37	3300	2.9				
	272	74	10.28	3100	3.2				
	353	57	7.93*	2850	3.2				
	444	45	6.31	2640	4.0				
	511	39	5.48	2520	3.8				
	64	314	21.78	5020	0.89	**DRC03 MX100M4**	39	**DRC03 100B5/B14 100LA4**	40
	81	250	17.33	4660	1.1	**DRCF03 MX100M4**	39	**DRCF03 100B5/B14 100LA4**	40
	93	217	15.06	4440	1.2	**DRCZ03 MX100M4**	39	**DRCZ03 100B5/B14 100LA4**	40
	113	178	12.37	4160	1.5				
	136	148	10.28	3910	1.6				
	177	114	7.93*	3590	1.6				
	222	91	6.31	3320	2.0				
	255	79	5.48	3170	1.9				
	311	65	4.50	2970	2.3				
	374	54	3.74	2790	2.8				
	73	277	12.37	4820	0.94	**DRC03 MX112M6**	39	**DRC03 112B5/B14 112M6**	40
	88	230	10.28	4530	1.0	**DRCF03 MX112M6**	39	**DRCF03 112B5/B14 112M6**	40
	113	178	7.93*	4160	1.0	**DRCZ03 MX112M6**	39	**DRCZ03 112B5/B14 112M6**	40
	143	141	6.31	3850	1.3				
	164	123	5.48	3670	1.2				
	200	101	4.50	3440	1.5				
	241	84	3.74	3230	1.8				
	48	418	58.09	7500	1.2	**DRC04 MX90L2**	42	**DRC04 90B5/B14 90L2**	43
	56	360	50.02	7130	1.4	**DRCF04 MX90L2**	42	**DRCF04 90B5/B14 90L2**	43
	64	315	43.75	6820	1.6	**DRCZ04 MX90L2**	42	**DRCZ04 90B5/B14 90L2**	43

P_{1n} [kW]	n_2 [r/min]	M_{2n} [Nm]	i	F_{r2} [N]	fs		Page		Page
2.2	72	279	38.73	6550	1.8	**DRC04 MX90L2**	42	**DRC04 90B5/B14 90L2**	43
	81	249	34.62	6310	2.0	**DRCF04 MX90L2**	42	**DRCF04 90B5/B14 90L2**	43
	99	204	28.30	5900	2.5	**DRCZ04 MX90L2**	42	**DRCZ04 90B5/B14 90L2**	43
	129	157	21.78	5410	3.1				
	162	125	17.33	5010	3.8				
	40	499	34.62	7950	1.0	**DRC04 MX100M4**	42	**DRC04 100B5/B14 100LA4**	43
	49	408	28.30	7430	1.2	**DRCF04 MX100M4**	42	**DRCF04 100B5/B14 100LA4**	43
	64	314	21.78	6810	1.5	**DRCZ04 MX100M4**	42	**DRCZ04 100B5/B14 100LA4**	43
	81	250	17.33	6310	1.9				
	93	217	15.06	6020	2.1				
	113	178	12.37	5640	2.6				
	136	148	10.28	5300	3.0				
	177	114	7.93*	4860	2.3				
	222	91	6.31	4510	2.9				
	255	79	5.48	4300	2.9				
	311	65	4.50	4030	3.5				
	374	54	3.74	3780	3.7				
	41	488	21.78	7890	1.0	**DRC04 MX112M6**	42	**DRC04 112B5/B14 112M6**	43
	52	388	17.33	7310	1.2	**DRCF04 MX112M6**	42	**DRCF04 112B5/B14 112M6**	43
	60	338	15.06	6980	1.4	**DRCZ04 MX112M6**	42	**DRCZ04 112B5/B14 112M6**	43
	73	277	12.37	6540	1.7				
	88	230	10.28	6150	1.9				
	113	178	7.93*	5640	1.5				
	143	141	6.31	5220	1.8				
	164	123	5.48	4980	1.9				
	200	101	4.50	4660	2.3				
	241	84	3.74	4390	2.4				
	72	279	38.73	6550	1.8	**DRC05 MX90L2**	45	**DRC05 TAM90 90L2**	46
	81	249	34.62	6310	2.0	**DRCF05 MX90L2**	45	**DRCF05 TAM90 90L2**	46
	99	204	28.30	5900	2.5	**DRCZ05 MX90L2**	45	**DRCZ05 TAM90 90L2**	46
	129	157	21.78	5410	3.1	***Albero in uscita Ø 40***		***Albero in uscita Ø 40***	
	162	125	17.33	5010	3.8	*Ouput shaft Ø 40*		*Ouput shaft Ø 40*	
	40	499	34.62	7950	1.0	**DRC05 MX100M4**	45	**DRC05 TAM100 100LA4**	46
	49	408	28.30	7430	1.2	**DRCF05 MX100M4**	45	**DRCF05 TAM100 100LA4**	46
	64	314	21.78	6810	1.5	**DRCZ05 MX100M4**	45	**DRCZ05 TAM100 100LA4**	46
	81	250	17.33	6310	1.9				
	93	217	15.06	6020	2.1	***Albero in uscita Ø 40***		***Albero in uscita Ø 40***	
	113	178	12.37	5640	2.6	*Ouput shaft Ø 40*		*Ouput shaft Ø 40*	
	136	148	10.28	5300	3.0				
	177	114	7.93*	4860	2.3				
	222	91	6.31	4510	2.9				
	255	79	5.48	4300	2.9				
	311	65	4.50	4030	3.5				
	374	54	3.74	3780	3.7				
	41	488	21.78	7890	1.0	**DRC05 MX112M6**	45	**DRC05 TAM112 112M6**	46
	52	388	17.33	7310	1.2	**DRCF05 MX112M6**	45	**DRCF05 TAM112 112M6**	46
	60	338	15.06	6980	1.4	**DRCZ05 MX112M6**	45	**DRCZ05 TAM112 112M6**	46
	73	277	12.37	6540	1.7				
	88	230	10.28	6150	1.9	***Albero in uscita Ø 40***		***Albero in uscita Ø 40***	
	113	178	7.93*	5640	1.5	*Ouput shaft Ø 40*		*Ouput shaft Ø 40*	
	143	141	6.31	5220	1.8				
	164	123	5.48	4980	1.9				
	200	101	4.50	4660	2.3				
	241	84	3.74	4390	2.4				

P_{1n} [kW]	n_2 [r/min]	M_{2n} [Nm]	i	F_{r2} [N]	fs		Page		Page
3.0	99	278	28.30	4350	1.1	**DRC03 MX100M2**	39	**DRC03 100B5/B14 100L2**	40
	129	214	21.78	3990	1.3	**DRCF03 MX100M2**	39	**DRCF03 100B5/B14 100L2**	40
	162	170	17.33	3690	1.6	**DRCZ03 MX100M2**	39	**DRCZ03 100B5/B14 100L2**	40
	186	148	15.06	3530	1.8				
	226	122	12.37	3300	2.1				
	272	101	10.28	3100	2.4				
	353	78	7.93*	2850	2.3				
	444	62	6.31	2640	2.9				
	511	54	5.48	2520	2.8				
	622	44	4.50	2350	3.4				
	749	37	3.74	2210	4.1				
	93	296	15.06	4440	0.88	**DRC03 MX100L4**	39	**DRC03 100B5/B14 100LB4**	40
	113	243	12.37	4160	1.1	**DRCF03 MX100L4**	39	**DRCF03 100B5/B14 100LB4**	40
	136	202	10.28	3910	1.2	**DRCZ03 MX100L4**	39	**DRCZ03 100B5/B14 100LB4**	40
	177	156	7.93*	3590	1.2				
	222	124	6.31	3320	1.5				
	255	108	5.48	3170	1.4				
	311	88	4.50	2970	1.7				
	374	73	3.74	2790	2.0				
	81	340	34.62	6310	1.5	**DRC04 MX100M2**	42	**DRC04 100B5/B14 100L2**	43
	99	278	28.30	5900	1.8	**DRCF04 MX100M2**	42	**DRCF04 100B5/B14 100L2**	43
	129	214	21.78	5410	2.2	**DRCZ04 MX100M2**	42	**DRCZ04 100B5/B14 100L2**	43
	162	170	17.33	5010	2.8				
	186	148	15.06	4780	3.1				
	226	122	12.37	4480	3.8				
	272	101	10.28	4210	4.4				
	353	78	7.93*	3860	3.3				
	444	62	6.31	3580	4.2				

P_{1n} [kW]	n_2 [r/min]	M_{2n} [Nm]	i	F_{r2} [N]	fs	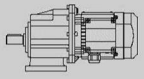	Page	 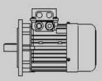	Page
3.0	49	556	28.30	7430	0.90	**DRC04 MX100L4**	42	**DRC04 100B5/B14 100LB4**	43
	64	428	21.78	6810	1.1	**DRCF04 MX100L4**	42	**DRCF04 100B5/B14 100LB4**	43
	81	340	17.33	6310	1.4	**DRCZ04 MX100L4**	42	**DRCZ04 100B5/B14 100LB4**	43
	93	296	15.06	6020	1.6				
	113	243	12.37	5640	1.9				
	136	202	10.28	5300	2.2				
	177	156	7.93*	4860	1.7				
	222	124	6.31	4510	2.1				
	255	108	5.48	4300	2.1				
	311	88	4.50	4030	2.6				
	374	73	3.74	3780	2.7				
	49	556	28.30	7430	0.90	**DRC05 MX100M2**	45	**DRC05 TAM100 100L2**	46
	64	428	21.78	6810	1.1	**DRCF05 MX100M2**	45	**DRCF05 TAM100 100L2**	46
	81	340	17.33	6310	1.4	**DRCZ05 MX100M2**	45	**DRCZ05 TAM100 100L2**	46
	93	296	15.06	6020	1.6				
	113	243	12.37	5640	1.9	***Albero in uscita Ø 40***		***Albero in uscita Ø 40***	
	136	202	10.28	5300	2.2	*Ouput shaft Ø 40*		*Ouput shaft Ø 40*	
	177	156	7.93*	4860	1.7				
	222	124	6.31	4510	2.1				
	255	108	5.48	4300	2.1				
	311	88	4.50	4030	2.6				
	374	73	3.74	3780	2.7				
	81	340	34.62	6310	1.5	**DRC05 MX100L4**	45	**DRC05 TAM100 100LB4**	46
	99	278	28.30	5900	1.8	**DRCF05 MX100L4**	45	**DRCF05 TAM100 100LB4**	46
	129	214	21.78	5410	2.2	**DRCZ05 MX100L4**	45	**DRCZ05 TAM100 100LB4**	46
	162	170	17.33	5010	2.8				
	186	148	15.06	4780	3.1	***Albero in uscita Ø 40***		***Albero in uscita Ø 40***	
	226	122	12.37	4480	3.8	*Ouput shaft Ø 40*		*Ouput shaft Ø 40*	
	272	101	10.28	4210	4.4				
	353	78	7.93*	3860	3.3				
	444	62	6.31	3580	4.2				

P_{1n} [kW]	n_2 [r/min]	M_{2n} [Nm]	i	F_{r2} [N]	fs	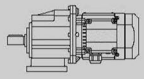	Page	 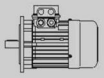	Page
4.0	162	227	17.33	3690	1.2	**DRC03 MX112M2**	39	**DRC03 112B5/B14 112M2**	40
	186	197	15.06	3530	1.3	**DRCF03 MX112M2**	39	**DRCF03 112B5/B14 112M2**	40
	226	162	12.37	3300	1.6	**DRCZ03 MX112M2**	39	**DRCZ03 112B5/B14 112M2**	40
	272	135	10.28	3100	1.8				
	353	104	7.93*	2850	1.7				
	444	83	6.31	2640	2.2				
	511	72	5.48	2520	2.1				
	622	59	4.50	2350	2.5				
	749	49	3.74	2210	3.1				
	136	269	10.28	3910	0.89	**DRC03 MX112M4**	39	**DRC03 112B5/B14 112M4**	40
	177	208	7.93*	3590	0.87	**DRCF03 MX112M4**	39	**DRCF03 112B5/B14 112M4**	40
	222	165	6.31	3320	1.1	**DRCZ03 MX112M4**	39	**DRCZ03 112B5/B14 112M4**	40
	255	144	5.48	3170	1.0				
	311	118	4.50	2970	1.3				
	374	98	3.74	2790	1.5				
	81	453	34.62	6310	1.1	**DRC04 MX112M2**	42	**DRC04 112B5/B14 112M2**	43
	99	371	28.30	5900	1.3	**DRCF04 MX112M2**	42	**DRCF04 112B5/B14 112M2**	43
	129	285	21.78	5410	1.7	**DRCZ04 MX112M2**	42	**DRCZ04 112B5/B14 112M2**	43
	162	227	17.33	5010	2.1				
	186	197	15.06	4780	2.3				
	226	162	12.37	4480	2.8				
	272	135	10.28	4210	3.3				
	353	104	7.93*	3860	2.5				
	444	83	6.31	3580	3.1				
	511	72	5.48	3410	3.2				
	622	59	4.50	3190	3.9				
	749	49	3.74	3000	4.1				
	81	454	17.33	6310	1.1	**DRC04 MX112M4**	42	**DRC04 112B5/B14 112M4**	43
	93	394	15.06	6020	1.2	**DRCF04 MX112M4**	42	**DRCF04 112B5/B14 112M4**	43
	113	324	12.37	5640	1.4	**DRCZ04 MX112M4**	42	**DRCZ04 112B5/B14 112M4**	43
	136	269	10.28	5300	1.6				
	177	208	7.93*	4860	1.3				
	222	165	6.31	4510	1.6				
	255	144	5.48	4300	1.6				
	311	118	4.50	4030	2.0				
	374	98	3.74	3780	2.0				

P_{1n} [kW]	n_2 [r/min]	M_{2n} [Nm]	i	F_{r2} [N]	fs	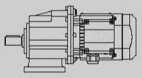	Page	 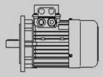	Page
4.0	81	453	34.62	6310	1.1	**DRC05 MX112M2**	45	**DRC05 TAM112 112M2**	46
	99	371	28.30	5900	1.3	**DRCF05 MX112M2**	45	**DRCF05 TAM112 112M2**	46
	129	285	21.78	5410	1.7	**DRCZ05 MX112M2**	45	**DRCZ05 TAM112 112M2**	46
	162	227	17.33	5010	2.1				
	186	197	15.06	4780	2.3	***Albero in uscita Ø 40***		***Albero in uscita Ø 40***	
	226	162	12.37	4480	2.8	*Ouput shaft Ø 40*		*Ouput shaft Ø 40*	
	272	135	10.28	4210	3.3				
	353	104	7.93*	3860	2.5				
	444	83	6.31	3580	3.1				
	511	72	5.48	3410	3.2				
	622	59	4.50	3190	3.9				
	749	49	3.74	3000	4.1				
	81	454	17.33	6310	1.1	**DRC05 MX112M4**	45	**DRC05 TAM112 112M4**	46
	93	394	15.06	6020	1.2	**DRCF05 MX112M4**	45	**DRCF05 TAM112 112M4**	46
	113	324	12.37	5640	1.4	**DRCZ05 MX112M4**	45	**DRCZ05 TAM112 112M4**	46
	136	269	10.28	5300	1.6				
	177	208	7.93*	4860	1.3	***Albero in uscita Ø 40***		***Albero in uscita Ø 40***	
	222	165	6.31	4510	1.6	*Ouput shaft Ø 40*		*Ouput shaft Ø 40*	
	255	144	5.48	4300	1.6				
	311	118	4.50	4030	2.0				
	374	98	3.74	3780	2.0				

6.3 DRC..HS.. Performance parameter

M_{2max} [Nm]	n_2 [r/min]	i	P_{1n} [kW]	n_1 [r/min]	F_{r2}	F_{r1}		Page
120	26.3	**53.33**	0.34	1400	2600	800	**DRC01-HS**	33
120	30.5	**45.89**	0.40	1400	2600	800	**DRCF01-HS**	33
120	34.9	**40.10**	0.46	1400	2600	800	**DRCZ01-HS**	33
120	39.5	**35.47**	0.52	1400	2560	800		
120	49.1	**28.50**	0.64	1400	2380	800		
120	59.4	**23.56**	0.78	1400	2230	800		
120	70.6	**19.83**	0.92	1400	2100	800		
90	78.4	**17.86**	0.77	1400	2030	800		
120	95.8	**14.62**	1.25	1400	1900	800		
90	101	**13.80**	1.00	1400	1860	800		
120	118	**11.90**	1.54	1400	1770	800		
120	143	**9.81**	1.87	1400	1660	800		
80	153	**9.17**	1.33	1400	1630	800		
80	181	**7.72**	1.58	1400	1540	800		
70	246	**5.69**	1.88	1400	1390	800		
70	302	**4.63**	2.31	1400	1290	800		
70	366	**3.82**	2.80	1400	1210	800		
200	25.9	**54.00**	0.57	1400	4500	800	**DRC02-HS**	36
200	30.1	**46.46**	0.66	1400	4500	800	**DRCF02-HS**	36
200	34.5	**40.60**	0.75	1400	4500	800	**DRCZ02-HS**	36
200	39.0	**35.91**	0.85	1400	4270	800		
200	48.5	**28.88**	1.06	1400	3970	800		
200	58.7	**23.85**	1.28	1400	3730	800		
200	69.7	**20.08**	1.52	1400	3520	800		
140	81.9	**17.10**	1.25	1400	3330	800		
200	94.5	**14.81**	2.06	1400	3180	800		
140	106	**13.21**	1.62	1400	3060	800		
200	116	**12.05**	2.53	1400	2970	800		
200	141	**9.93**	3.08	1400	2780	800		
120	159	**8.78**	2.09	1400	2670	800		
120	189	**7.39**	2.48	1400	2520	800		
100	257	**5.45**	2.80	1400	2280	800		
100	316	**4.43**	3.45	1400	2120	800		
80	383	**3.66**	3.34	1400	1990	800		
300	24.1	**58.09**	0.79	1400	6000	1200	**DRC03-HS**	39
300	28.0	**50.02**	0.92	1400	6000	1200	**DRCF03-HS**	39
300	32.0	**43.75**	1.05	1400	6000	1200	**DRCZ03-HS**	39
300	36.1	**38.73**	1.18	1400	6000	1200		
300	40.4	**34.62**	1.32	1400	5860	1200		
300	49.5	**28.30**	1.62	1400	5480	1200		
280	64.3	**21.78**	1.96	1400	5020	1200		
280	81	**17.33**	2.47	1400	4660	1200		
260	93	**15.06**	2.64	1400	4440	1200		
260	113	**12.37**	3.21	1400	4160	1200		
240	136	**10.28**	3.57	1400	3910	1200		
180	177	**7.93**	3.47	1400	3590	1200		
180	222	**6.31**	4.36	1400	3320	1200		
150	255	**5.48**	4.18	1400	3170	1200		
150	311	**4.50**	5.09	1400	2970	1200		
150	374	**3.74**	6.12	1400	2790	1200		

M_{2max} [Nm]	n_2 [r/min]	i	P_{1n} [kW]	n_1 [r/min]	F_{r2}	F_{r1}	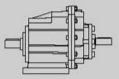	Page
500	24.1	**58.09**	1.31	1400	8000	1200	**DRC04-HS**	42
500	28.0	**50.02**	1.53	1400	8000	1200	**DRCF04-HS**	42
500	32.0	**43.75**	1.75	1400	8000	1200	**DRCZ04-HS**	42
500	36.1	**38.73**	1.97	1400	8000	1200		
500	40.4	**34.62**	2.21	1400	7950	1200		
500	49.5	**28.30**	2.70	1400	7430	1200		
480	64.3	**21.78**	3.37	1400	6810	1200		
480	81	**17.33**	4.23	1400	6310	1200		
460	93	**15.06**	4.66	1400	6020	1200		
460	113	**12.37**	5.68	1400	5640	1200		
440	136	**10.28**	6.54	1400	5300	1200		
260	177	**7.93**	5.01	1400	4860	1200		
260	222	**6.31**	6.29	1400	4510	1200		
230	255	**5.48**	6.41	1400	4300	1200		
230	311	**4.50**	7.80	1400	4030	1200		
200	374	**3.74**	8.17	1400	3780	1200		
500	24.1	**58.09**	1.31	1400	8000	1200	**DRC05-HS**	45
500	28.0	**50.02**	1.53	1400	8000	1200	**DRCF05-HS**	45
500	32.0	**43.75**	1.75	1400	8000	1200	**DRCZ05-HS**	45
500	36.1	**38.73**	1.97	1400	8000	1200		
500	40.4	**34.62**	2.21	1400	7950	1200		
500	49.5	**28.30**	2.70	1400	7430	1200		
480	64.3	**21.78**	3.37	1400	6810	1200		
480	81	**17.33**	4.23	1400	6310	1200		
460	93	**15.06**	4.66	1400	6020	1200		
460	113	**12.37**	5.68	1400	5640	1200		
440	136	**10.28**	6.54	1400	5300	1200		
260	177	**7.93**	5.01	1400	4860	1200		
260	222	**6.31**	6.29	1400	4510	1200		
230	255	**5.48**	6.41	1400	4300	1200		
230	311	**4.50**	7.80	1400	4030	1200		
200	374	**3.74**	8.17	1400	3780	1200		

7. OUTLINE DIMENSION SHEET

DRC..01..MX..

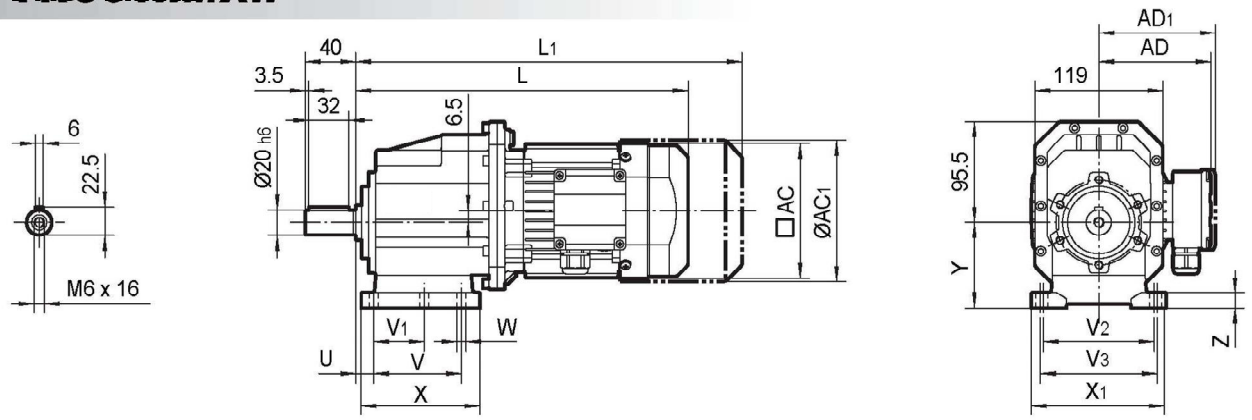

DRC..01..MX..

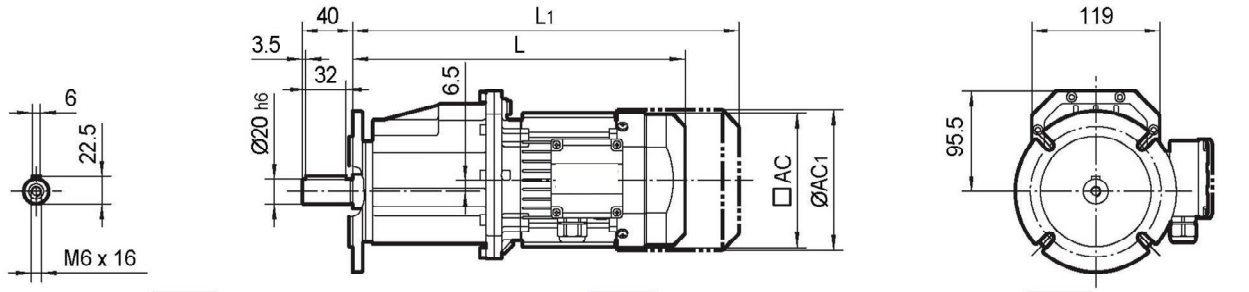

I

Ø120

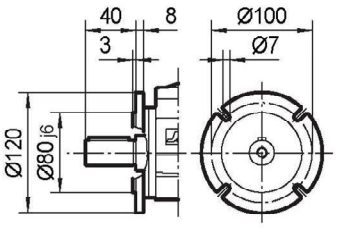

II

Ø140

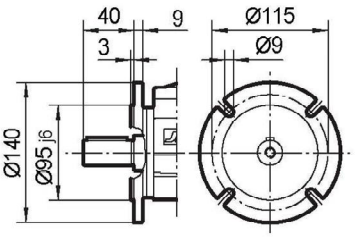

III

Ø160

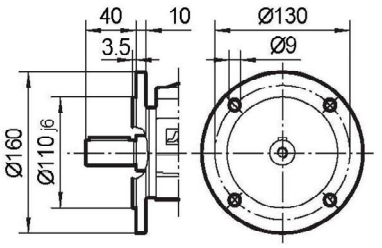

DRC..01..MX..

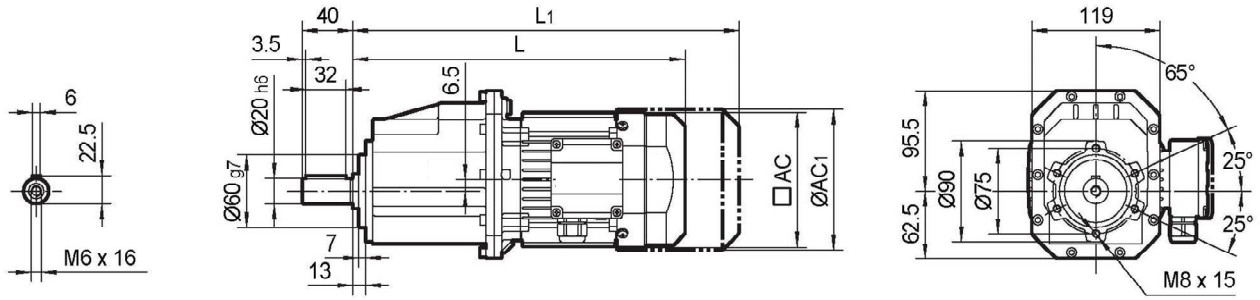

Motor Type	L	L1	AC	AC1	AD	AD1
MX63	305	360	132	132	105	105
MX71	320	384	134	148	122	127
MX80	355	419	134	148	122	127
MX90	386	471	182	203	154	161

Foot Code	U	V	V1	V2	V3	W	X	X1	Y	Z
PB	18	87	50	110	—	9	118	130	85	15
PM	18	80	—	110	120	9	118	145	75	15
PS	18	50	—	—	110	9	90	132	75	13

DRC..01..P(IEC)

INPUT

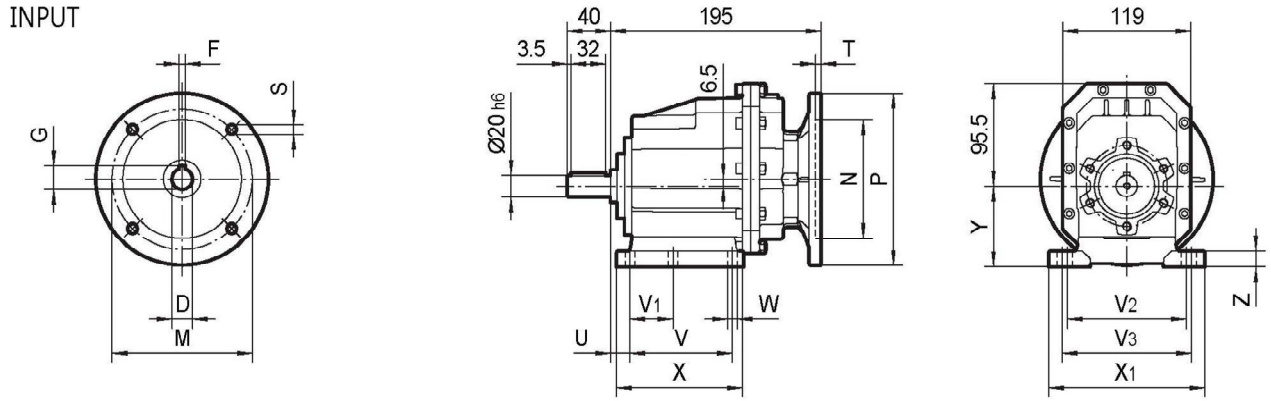

DRC..01..P(IEC)(IEC)

OUTPUT

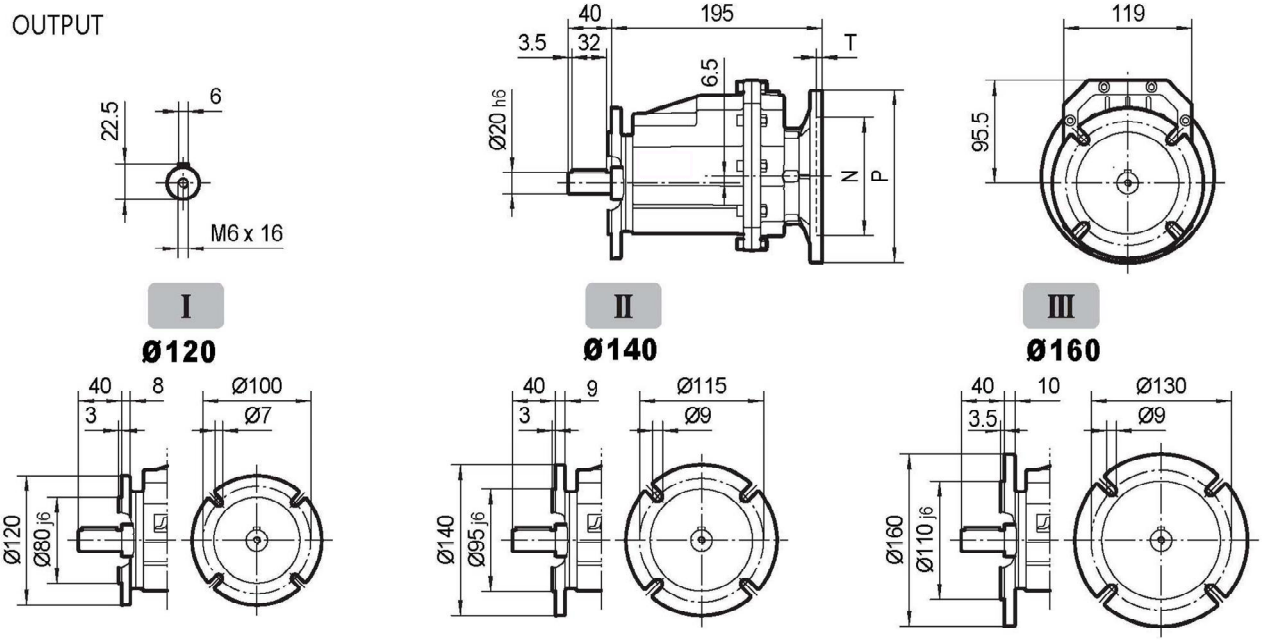

DRC..01..P(IEC)(IEC)

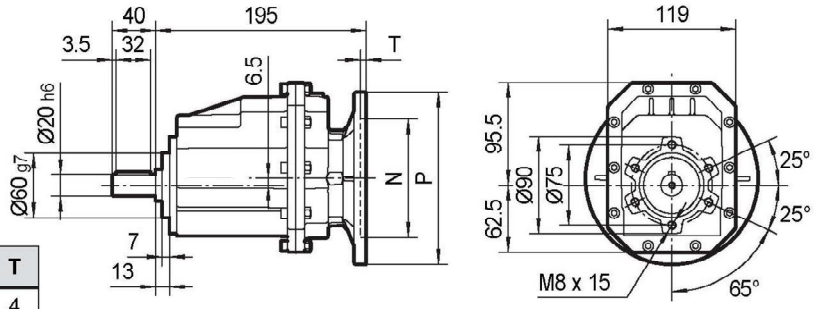

IEC	D_{E8}	F	G	P	M	N	S	T
P63B5	11	4	12.8	140	115	95	9	4
P71B5	14	5	16.3	160	130	110	9	4
P71B14	14	5	16.3	105	85	70	7	4
P80B5	19	6	21.8	200	165	130	11	4
P80B14	19	6	21.8	120	100	80	7	4
P90B5	24	8	27.3	200	165	130	11	4
P90B14	24	8	27.3	140	115	95	9	4

Foot Code	U	V	V_1	V_2	V_3	W	X	X1	Y	Z
PB	18	87	50	110	—	9	118	130	85	15
PM	18	80	—	110	120	9	118	145	75	15
PS	18	50	—	—	110	9	90	132	75	13

DRC..01..HS

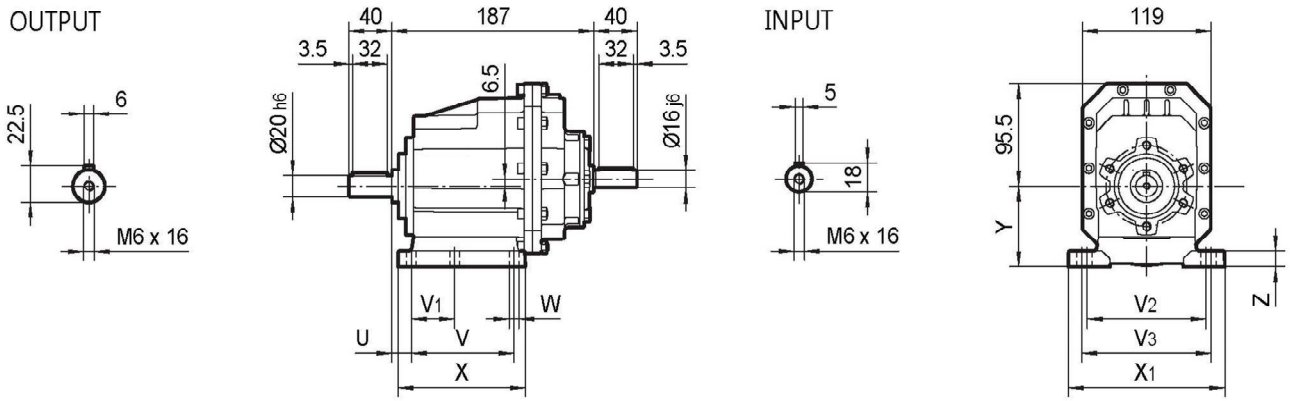

DRC..01..HS

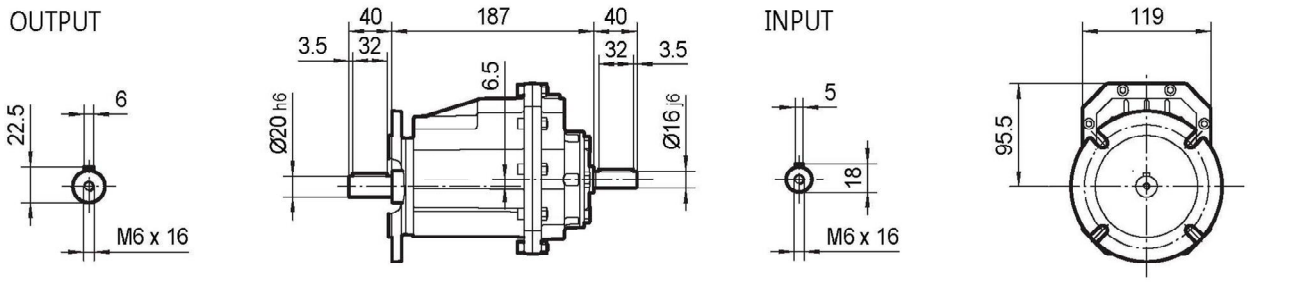

I **Ø120**

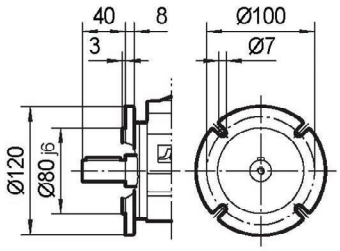

II **Ø140**

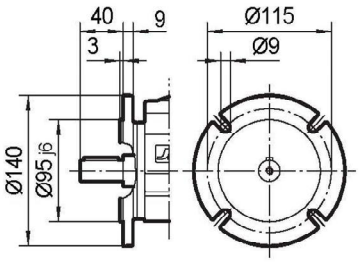

III **Ø160**

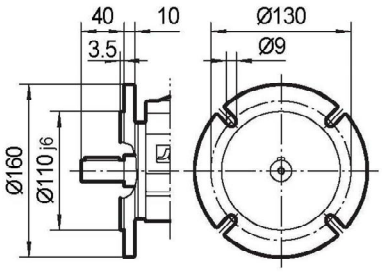

DRC..01..HS

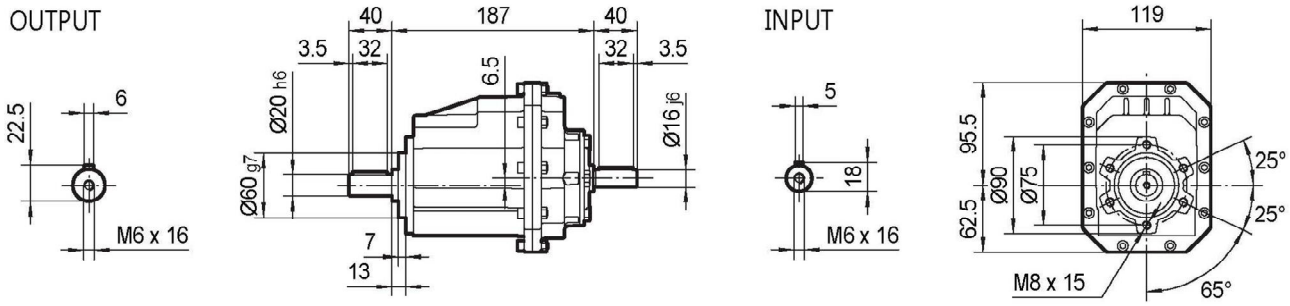

Foot Code	U	V	V_1	V_2	V_3	W	X	X1	Y	Z
PB	18	87	50	110	—	9	118	130	85	15
PM	18	80	—	110	120	9	118	145	75	15
PS	18	50	—	—	110	9	90	132	75	13

DRC..02..MX..

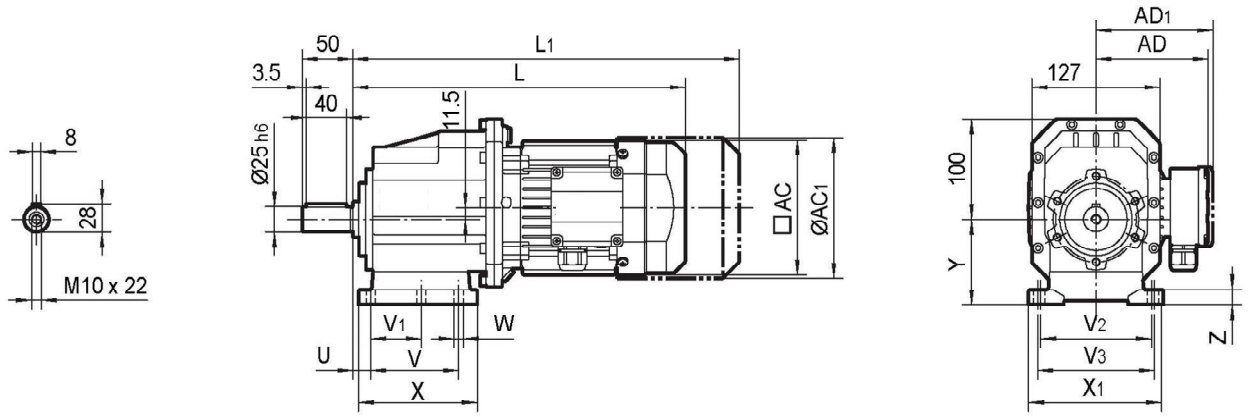

DRC..02..MX..

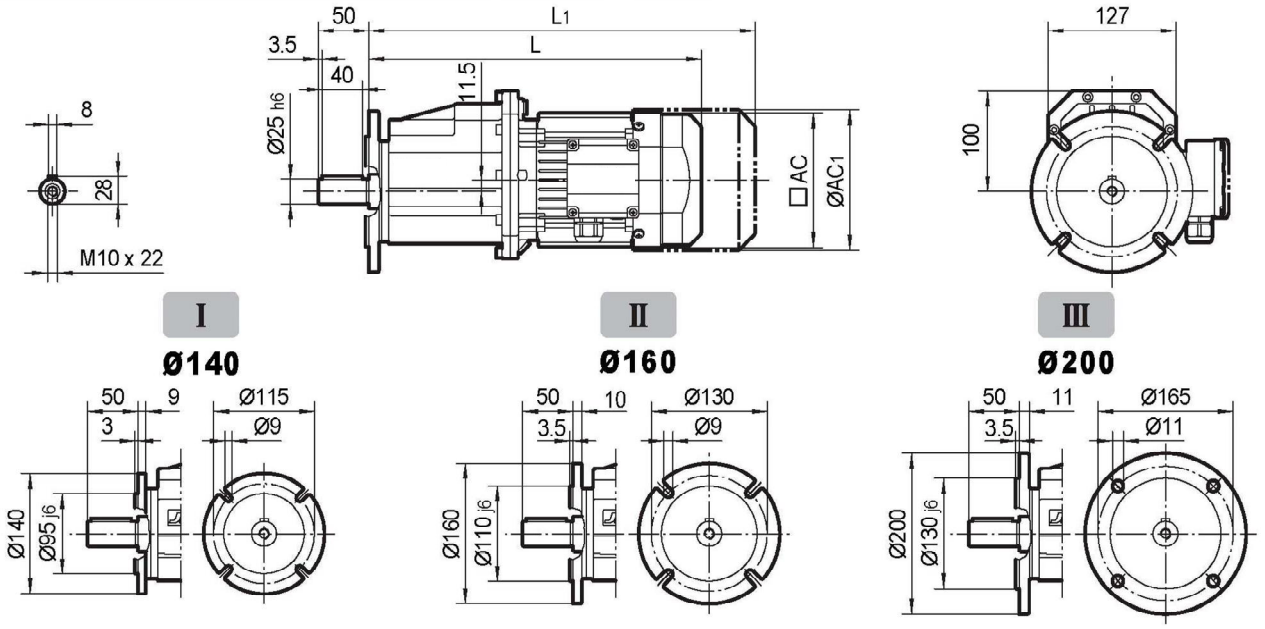

DRC..02..MX..

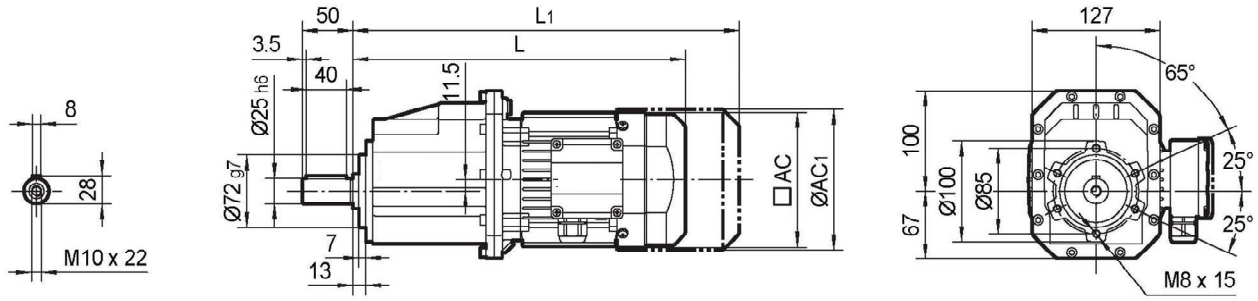

Motor Type	L	L1	AC	AC1	AD	AD1
MX63	315	370	132	132	105	105
MX71	330	394	134	148	122	127
MX80	365	429	134	148	122	127
MX90	396	481	182	203	154	161

Foot Code	U	V	V1	V2	V3	W	X	X1	Y	Z
PB	18	107.5	60	130	—	11	136	155	100	17
PM	25	85	—	110	120	9	112	145	80	15
PS	25	130	—	—	110	9	160	—	90	20

DRC..02..P(IEC)

INPUT

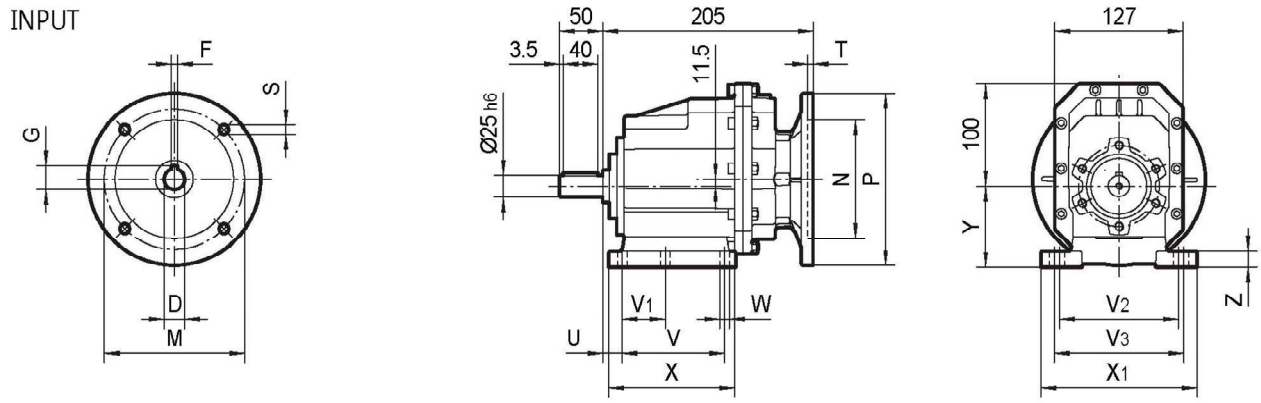

DRC..B02..P(IEC)

OUTPUT

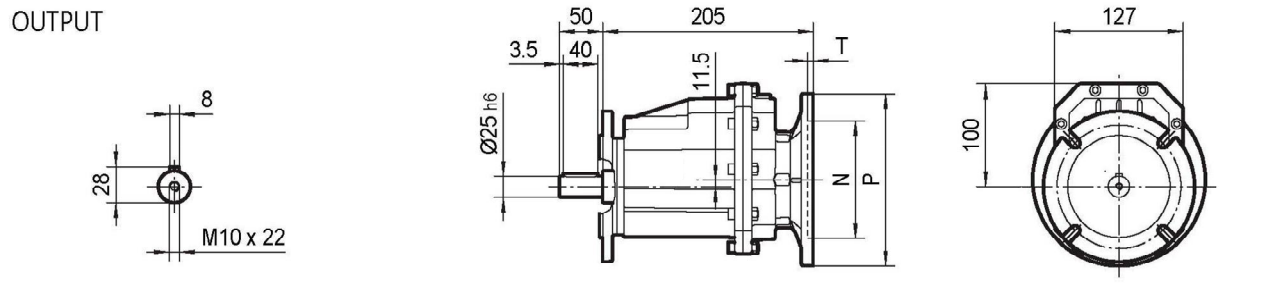

I **Ø140**

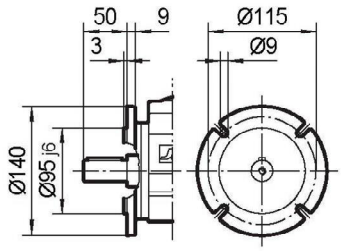

II **Ø160**

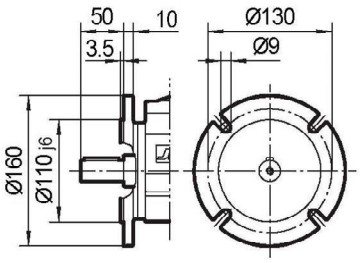

III **Ø200**

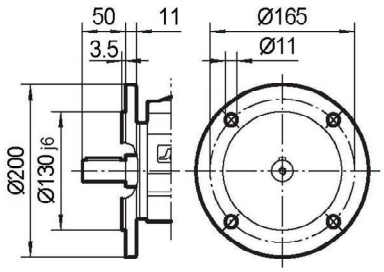

DRC2013..P(IEC)

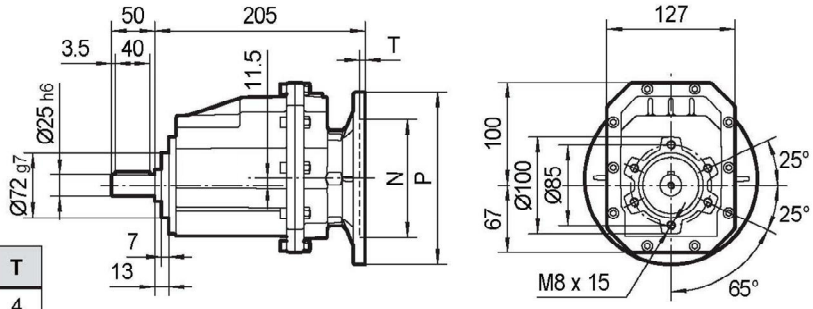

IEC	D_{E8}	F	G	P	M	N	S	T
P63B5	11	4	12.8	140	115	95	9	4
P71B5	14	5	16.3	160	130	110	9	4
P71B14	14	5	16.3	105	85	70	7	4
P80B5	19	6	21.8	200	165	130	11	4
P80B14	19	6	21.8	120	100	80	7	4
P90B5	24	8	27.3	200	165	130	11	4
P90B14	24	8	27.3	140	115	95	9	4

Foot Code	U	V	V_1	V_2	V_3	W	X	X_1	Y	Z
PB	18	107.5	60	130	—	11	136	155	100	17
PM	25	85	—	110	120	9	112	145	80	15
PS	25	130	—	—	110	9	160	—	90	20

DRC..02..HS

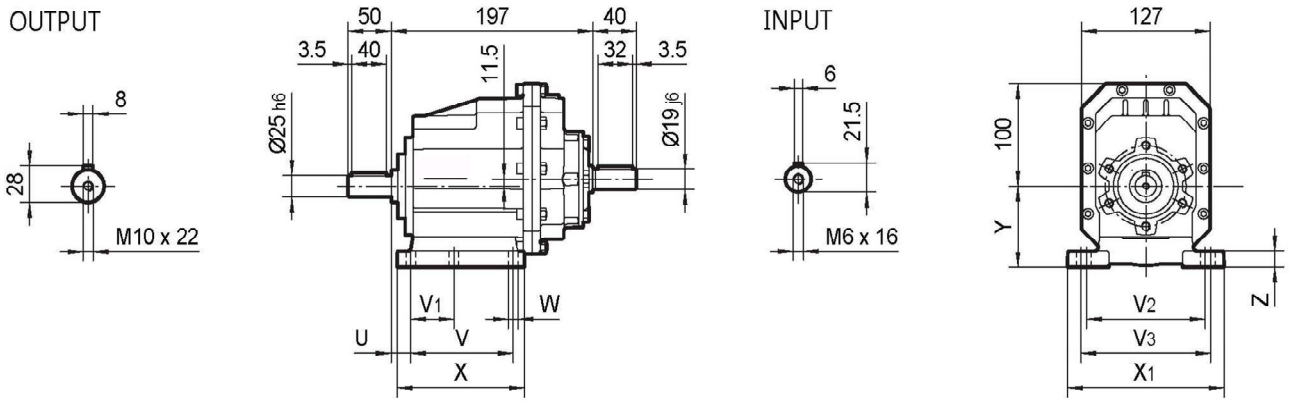

DRC..02..HS

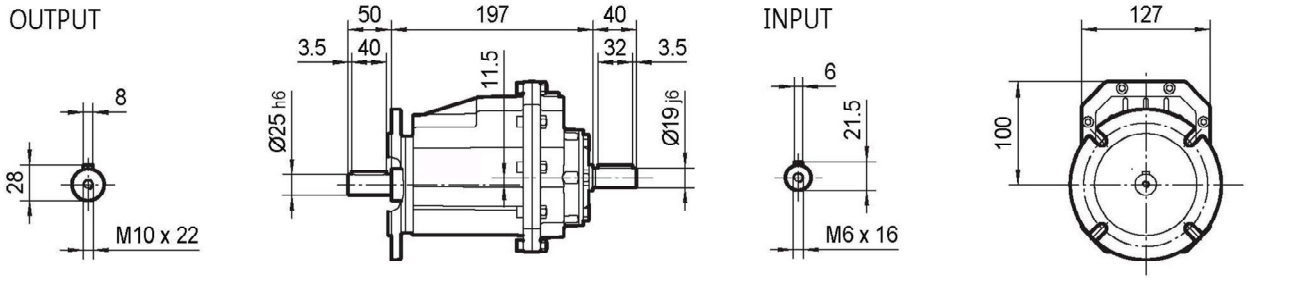

I **Ø140**

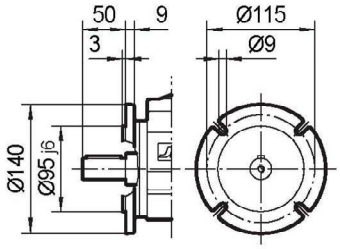

II **Ø160**

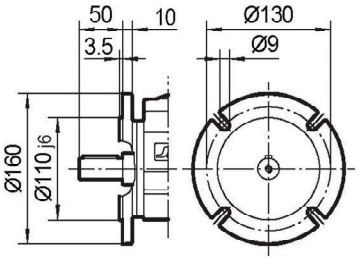

III **Ø200**

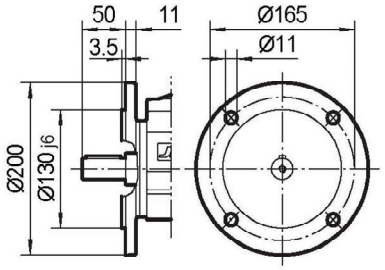

DRC..02..HS

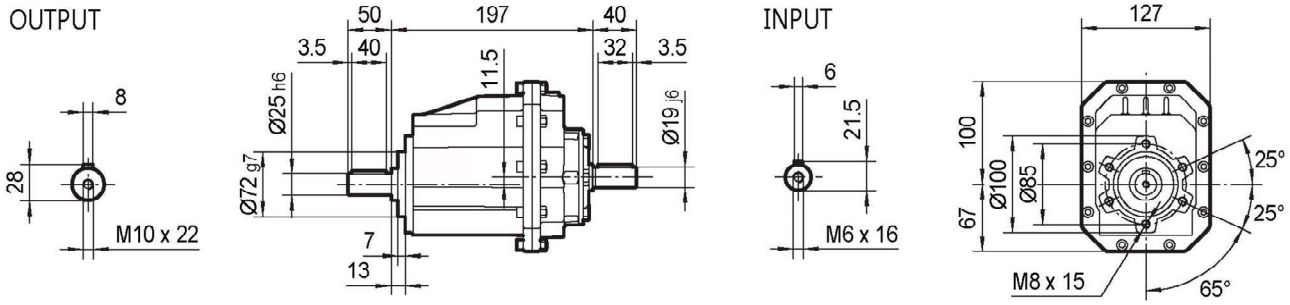

Foot Code	U	V	V_1	V_2	V_3	W	X	X_1	Y	Z
PB	18	107.5	60	130	—	11	136	155	100	17
PM	25	85	—	110	120	9	112	145	80	15
PS	25	130	—	—	110	9	160	—	90	20

DRC..03..MX..

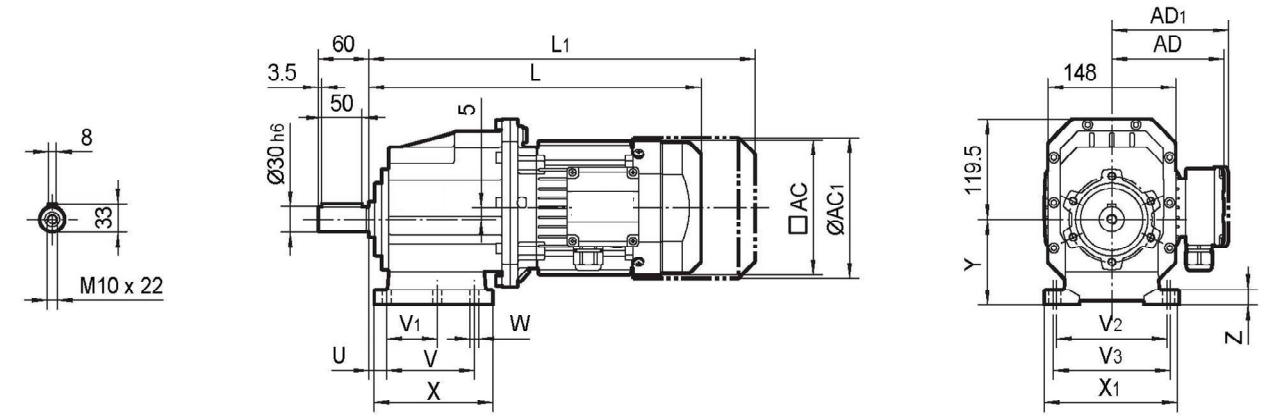

DRC..03..MX..

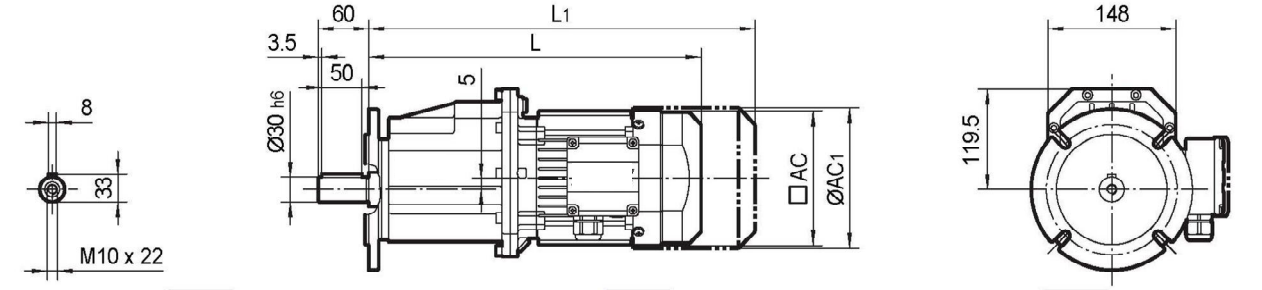

I

Ø160

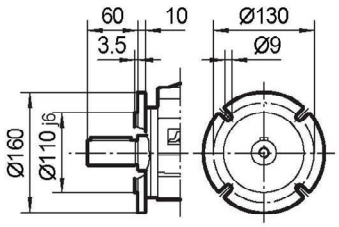

II

Ø200

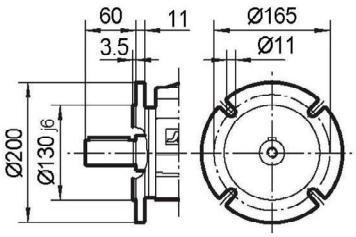

III

Ø250

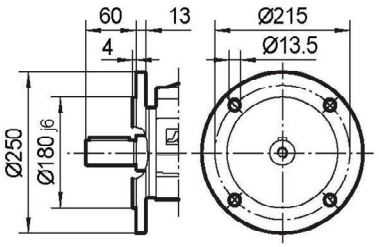

DRC..03..MX..

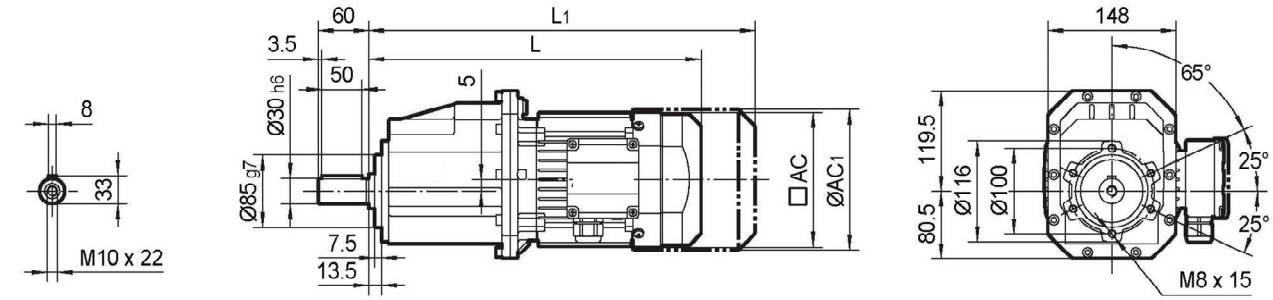

Motor Type	L	L_1	AC	AC_1	AD	AD_1
MX71	345	409	134	148	122	127
MX80	380	444	134	148	122	127
MX90	411	496	182	203	154	161
MX100M	451	536	182	203	154	161
MX100L	481	566	182	203	154	161
MX112	492	572	206	221	179	182

Foot Code	U	V	V_1	V_2	V_3	W	X	X_1	Y	Z
PB	18	130	70	160	—	11	156	190	110	20
PM	30	100	—	135	150	11	150	190	110	18
PS	30	165	—	—	135	14	195	—	115	20

DRC..03..P(IEC)

INPUT

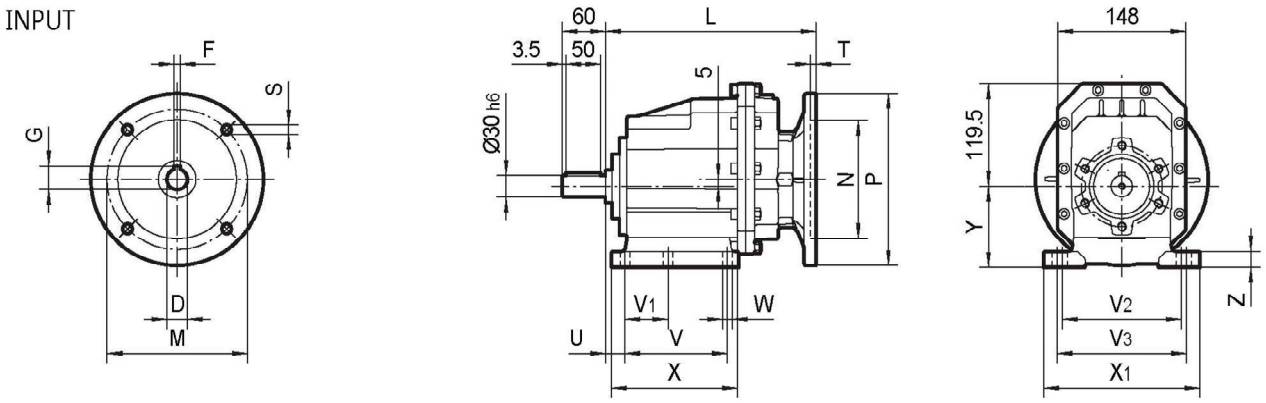

DRC..03..B(IEC)

OUTPUT

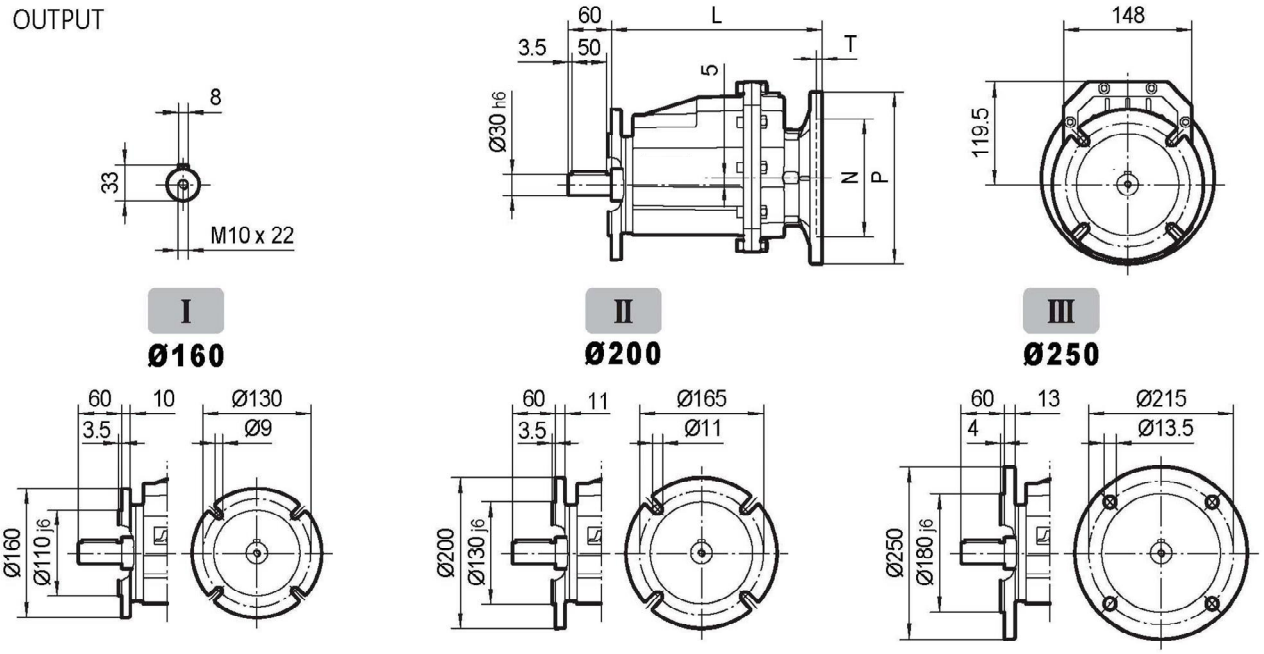

DRC..03..B(IEC)

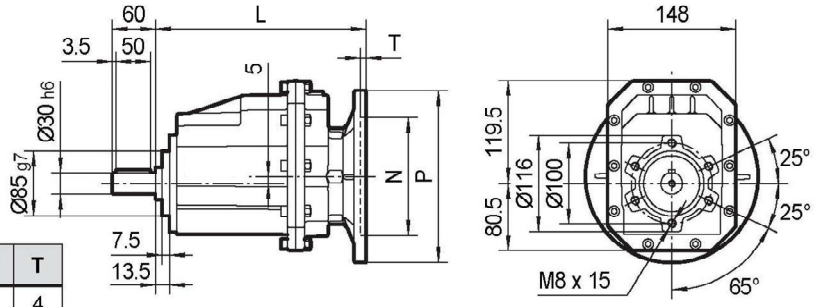

IEC	D_{E8}	F	G	P	L	M	N	S	T
P71B5	14	5	16.3	160	220	130	110	9	4
P80B5	19	6	21.8	200	220	165	130	11	4
P80B14	19	6	21.8	120	220	100	80	7	4
P90B5	24	8	27.3	200	220	165	130	11	4
P90B14	24	8	27.3	140	220	115	95	9	4
P100/112B5	28	8	31.3	250	237	215	180	13.5	4.5
P100/112B14	28	8	31.3	160	237	130	110	9	4.5

Foot Code	U	V	V_1	V_2	V_3	W	X	X_1	Y	Z
PB	18	130	70	160	—	11	156	190	110	20
PM	30	100	—	135	150	11	150	190	110	18
PS	30	165	—	—	135	14	195	—	115	20

DRC..03..HS

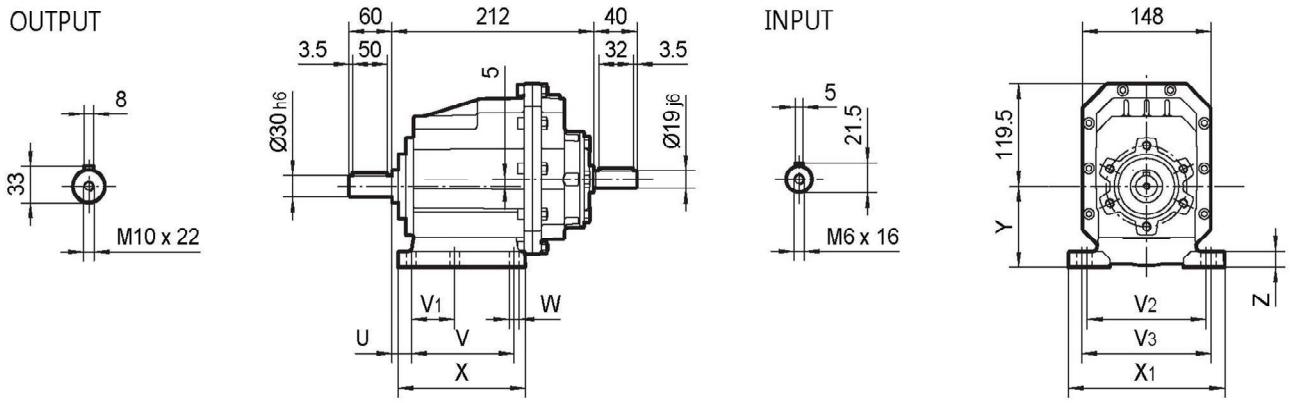

DRC..03..HS

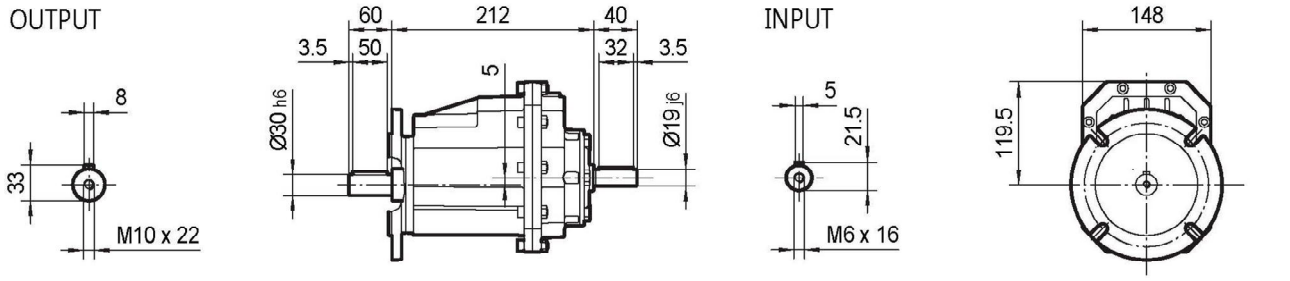

I **Ø160**

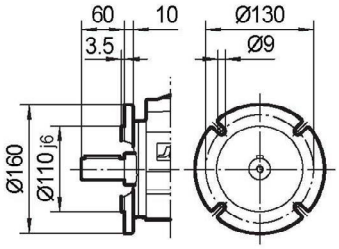

II **Ø200**

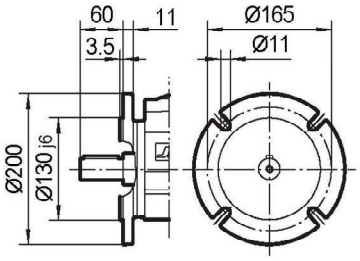

III **Ø250**

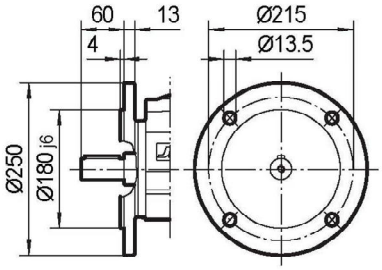

DRC..03..HS

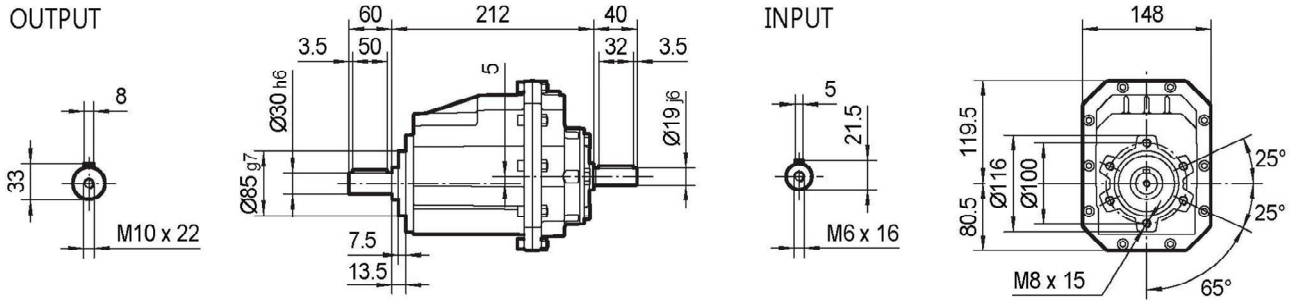

Foot Code	U	V	V_1	V_2	V_3	W	X	X_1	Y	Z
PB	18	130	70	160	—	11	156	190	110	20
PM	30	100	—	135	150	11	150	190	110	18
PS	30	165	—	—	135	14	195	—	115	20

DRC..04..MX..

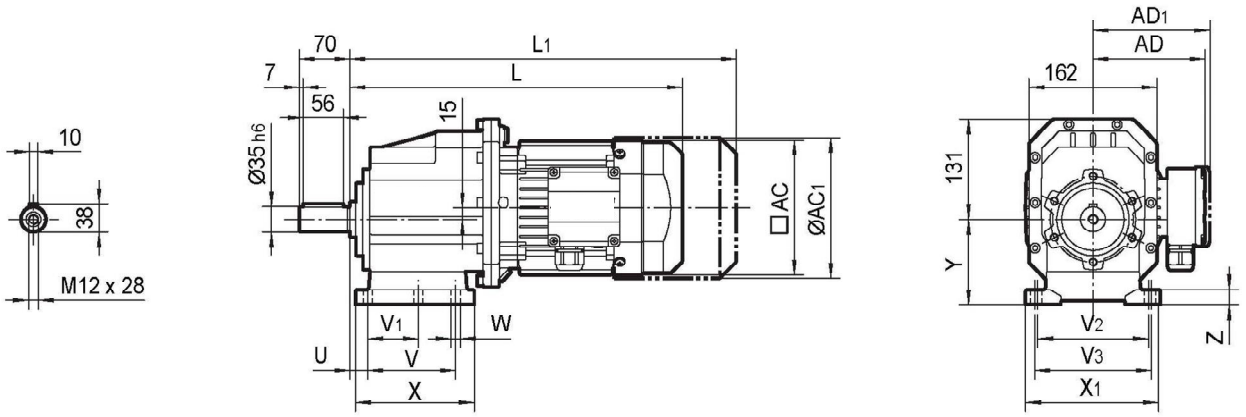

DRC..04..MX..MX..

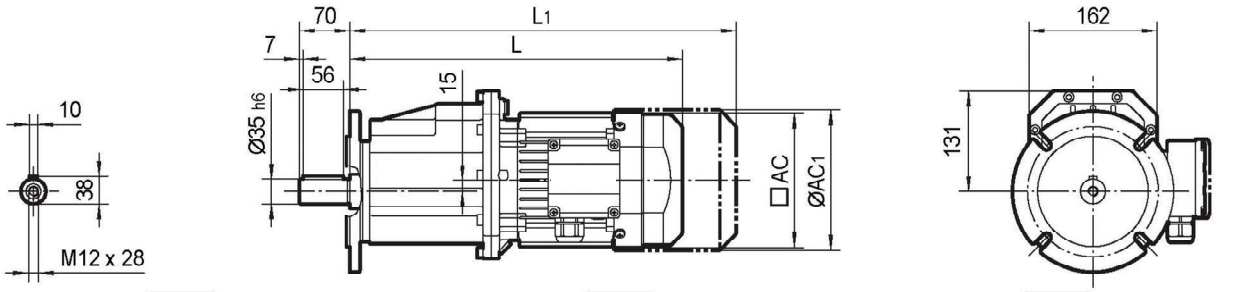

I **II** **III**

Ø160 **Ø200** **Ø250**

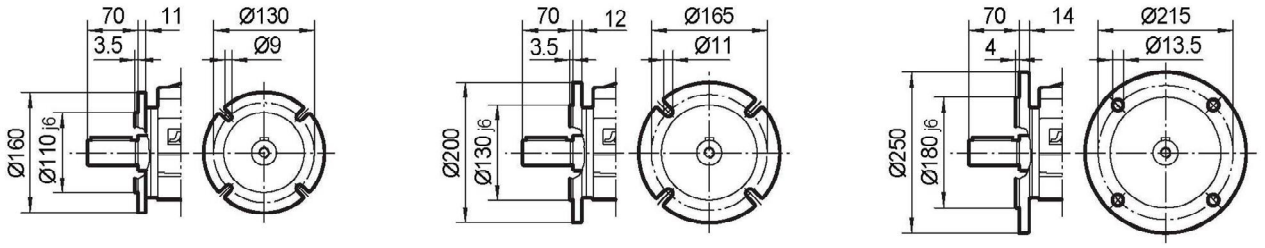

DRC..20..MX..MX..

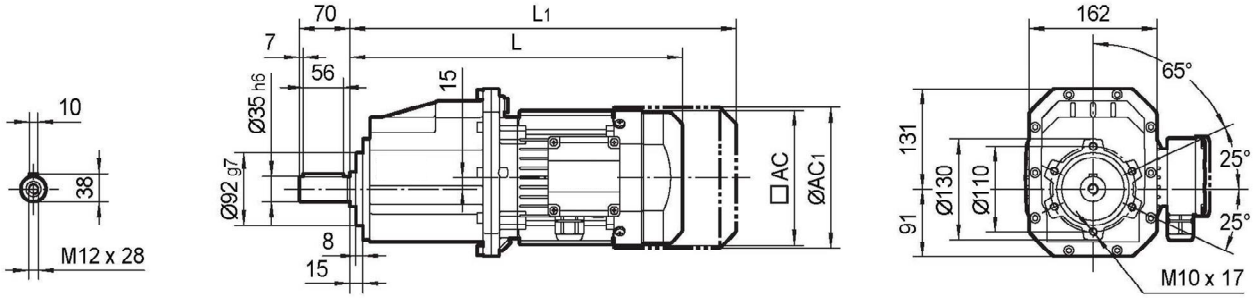

Motor Type	L	L_1	AC	AC_1	AD	AD_1
MX80	393	457	134	148	122	127
MX90	424	509	182	203	154	161
MX100M	464	549	182	203	154	161
MX100L	494	579	182	203	154	161
MX112	505	585	206	221	179	182

Foot Code	U	V	V_1	V_2	V_3	W	X	X_1	Y	Z
PM	35	110	—	170	185	14	150	230	120	20
PB	19.5	149.5	—	180	—	14	185	215	130	20
PS	30	165	—	—	135	14	195	—	115	20

DRC..04..P(IEC)

INPUT

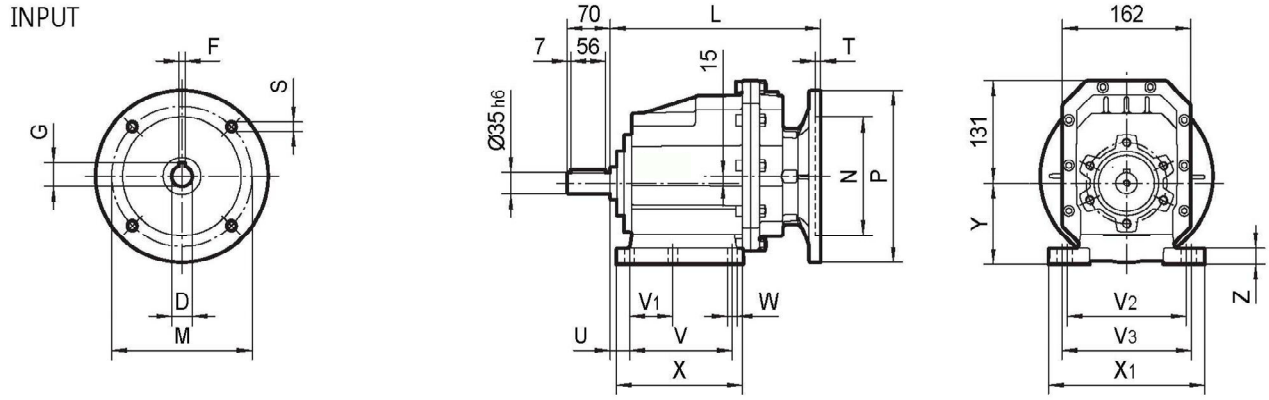

DRC..04..P(IEC)

OUTPUT

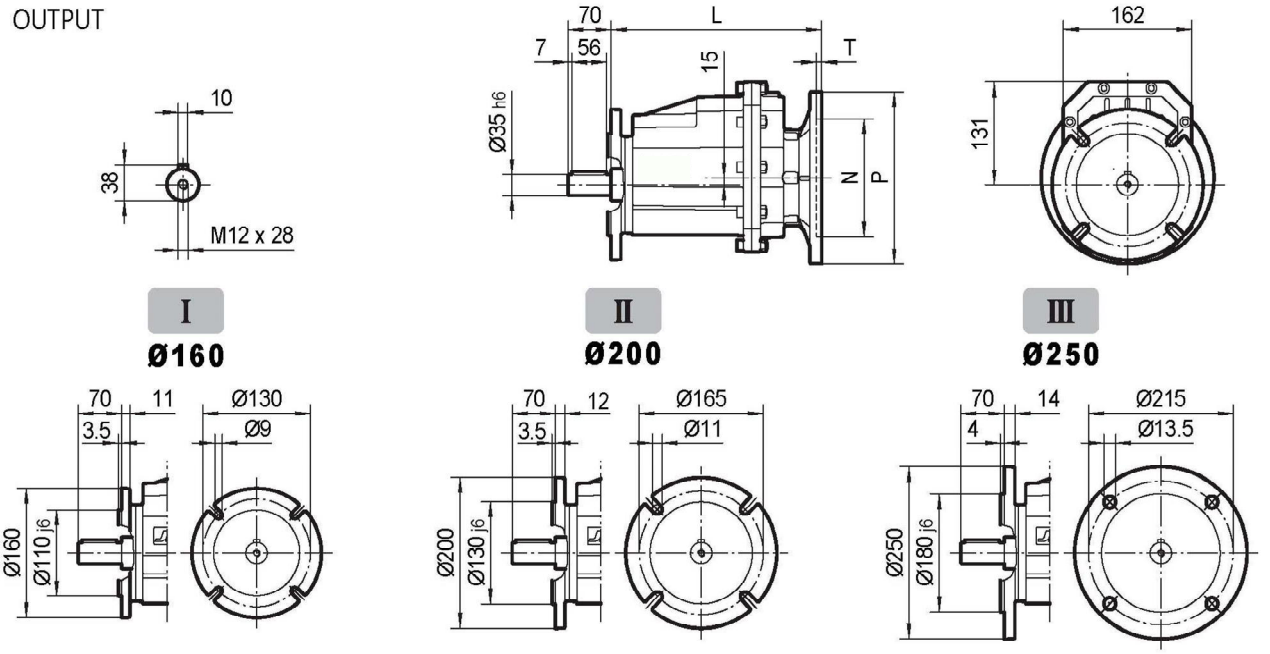

DRC..04..P(IEC)

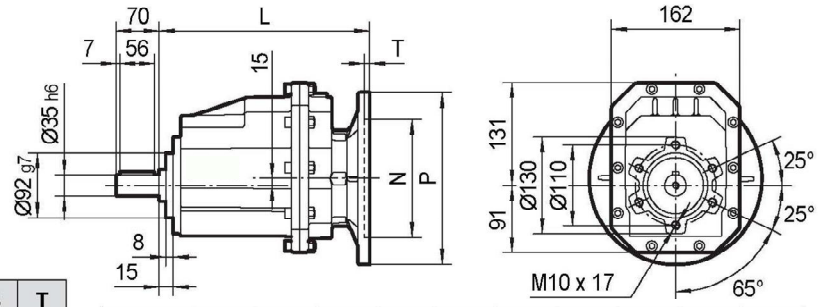

IEC	D_{E8}	F	G	P	L	M	N	S	T
P80B5	19	6	21.8	200	233	165	130	11	4
P80B14	19	6	21.8	120	233	100	80	7	4
P90B5	24	8	27.3	200	233	165	130	11	4
P90B14	24	8	27.3	140	233	115	95	9	4
P100/112B5	28	8	31.3	250	250	215	180	13.5	4.5
P100/112B14	28	8	31.3	160	250	130	110	9	4.5

Foot Code	U	V	V_1	V_2	V_3	W	X	X_1	Y	Z
PM	35	110	—	170	185	14	150	230	120	20
PS	19.5	149.5	—	180	—	14	185	215	130	20
PS	30	165	—	—	135	14	195	—	115	20

DRC..04..HS

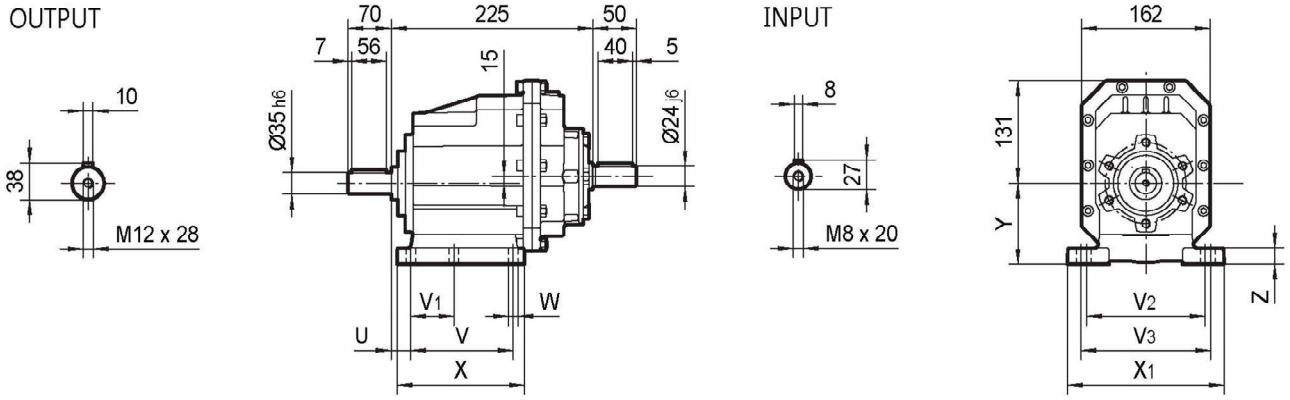

DRC..04..HS

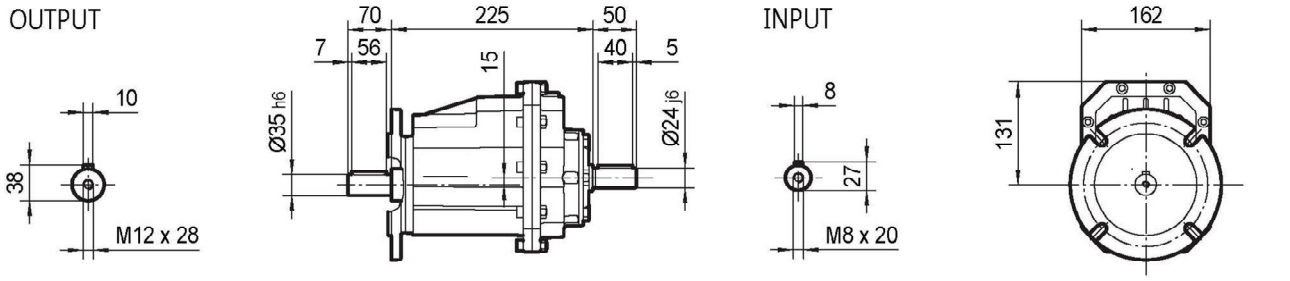

I **Ø160**

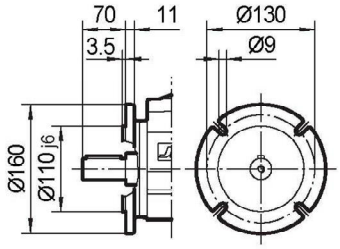

II **Ø200**

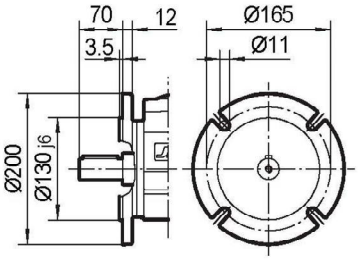

III **Ø250**

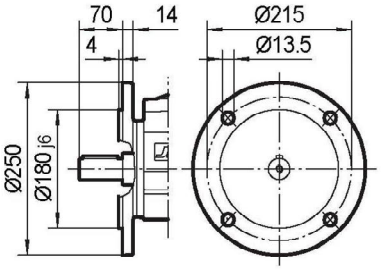

DRC..04..HS

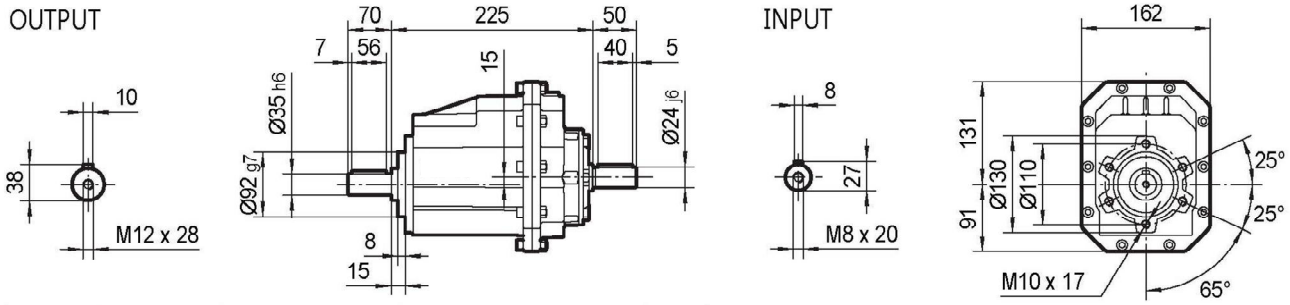

Foot Code	U	V	V_1	V_2	V_3	W	X	X_1	Y	Z
PM	35	110	—	170	185	14	150	230	120	20
PB	19.5	149.5	—	180	—	14	185	215	130	20
PS	30	165	—	—	135	14	195	—	115	20

DRC05..MX..

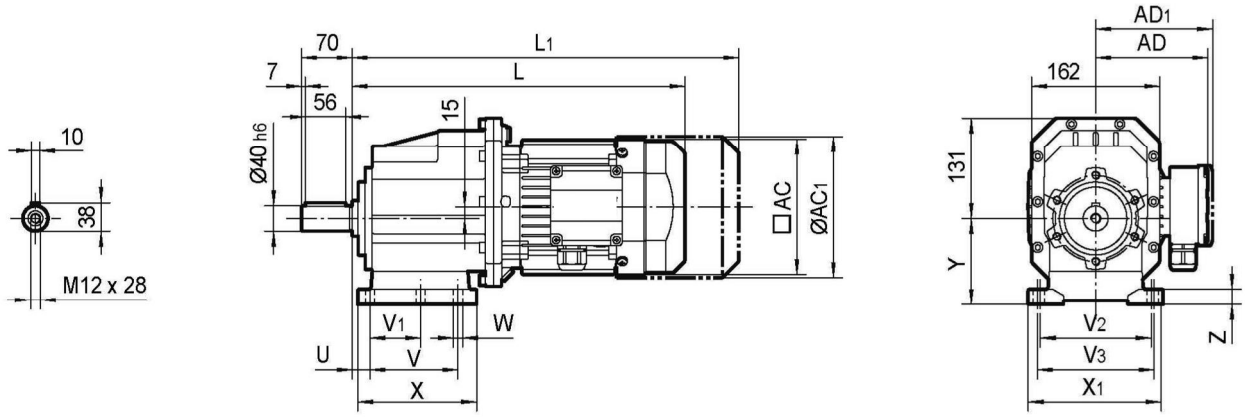

DRCF05..MX..

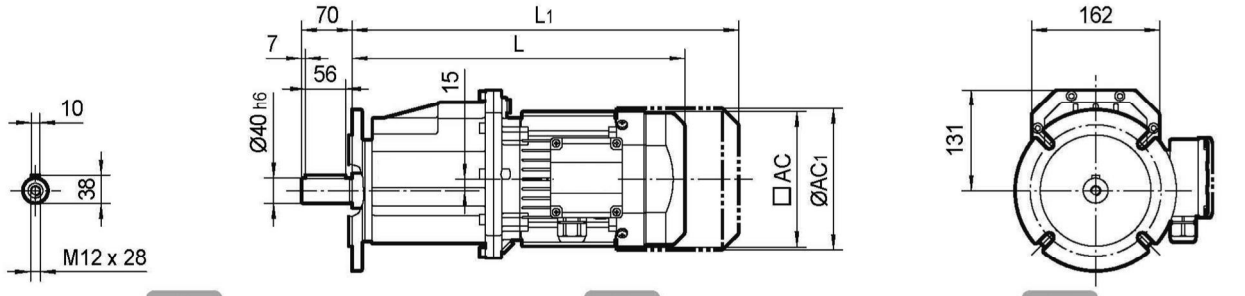

I Ø160 II Ø200 III Ø250

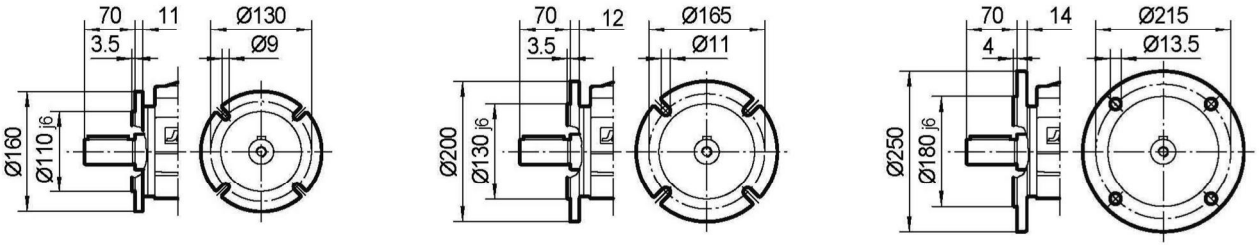

DRCZ05..MX..

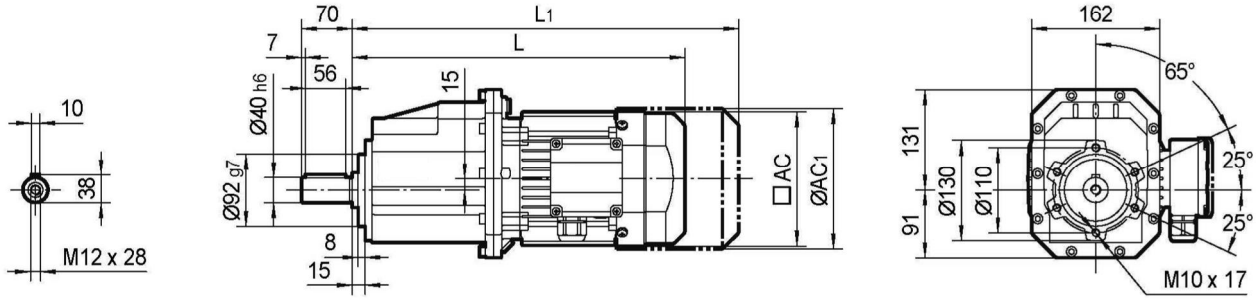

Motor Type	L	L1	AC	AC1	AD	AD1
MX80	393	457	134	148	122	127
MX90	424	509	182	203	154	161
MX100M	464	549	182	203	154	161
MX100L	494	579	182	203	154	161
MX112	505	585	206	221	179	182

Foot Code	U	V	V1	V2	V3	W	X	X1	Y	Z
PM	40	110	—	170	185	14	150	230	120	20
PB	19.5	149.5	—	180	—	14	185	215	130	20
PS	30	165	—	—	135	14	195	—	115	20

DRC..05..TAM(IEC)..

INPUT

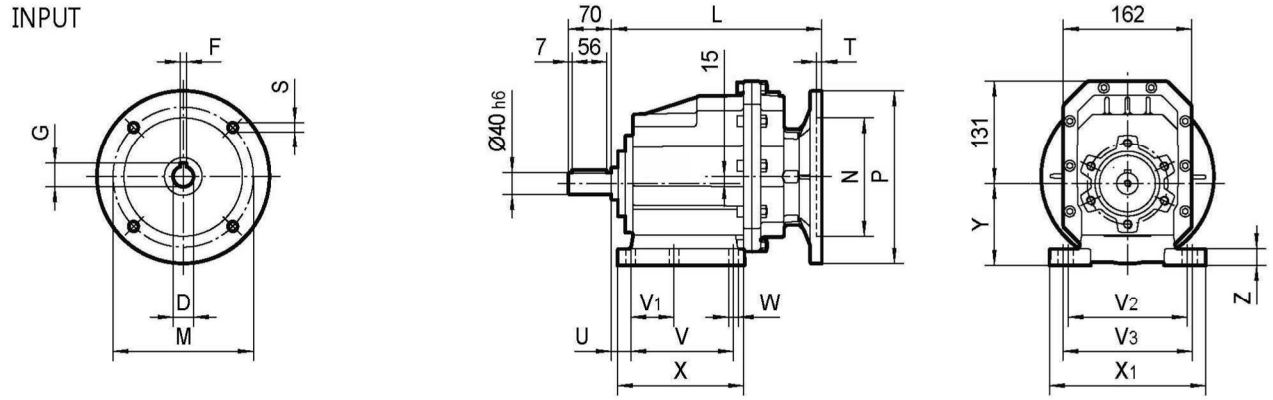

DRCF05..TAM(IEC)..

OUTPUT

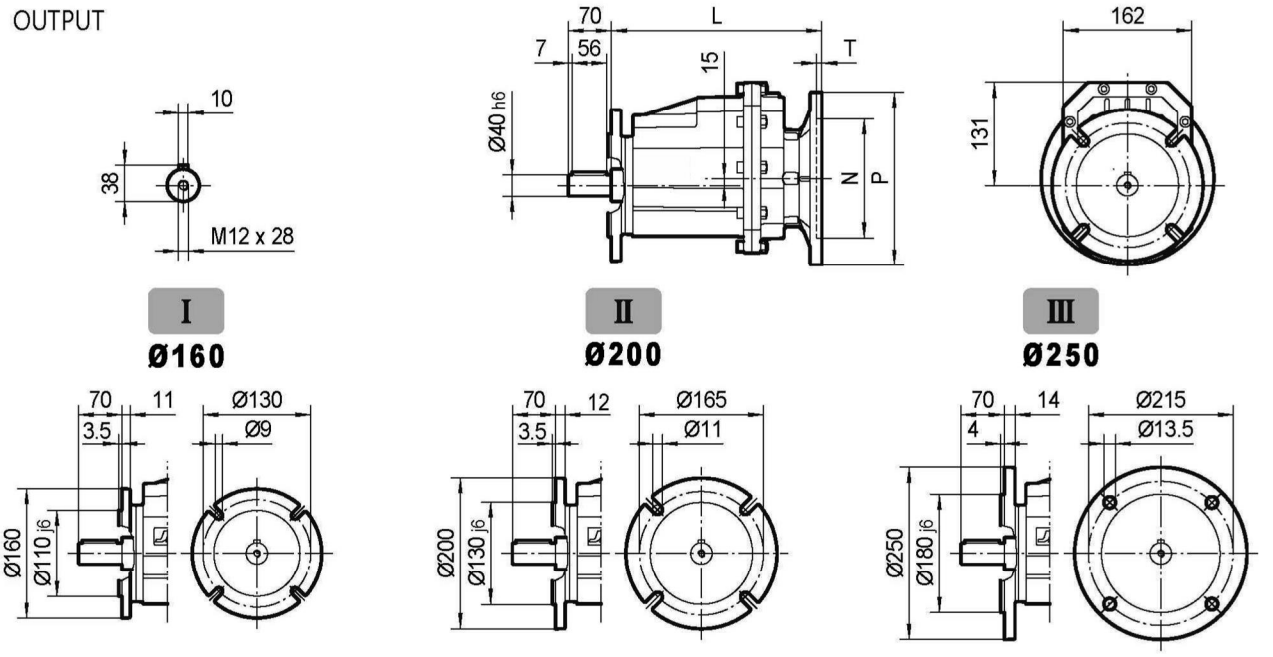

DRCZ05..TAM(IEC)..

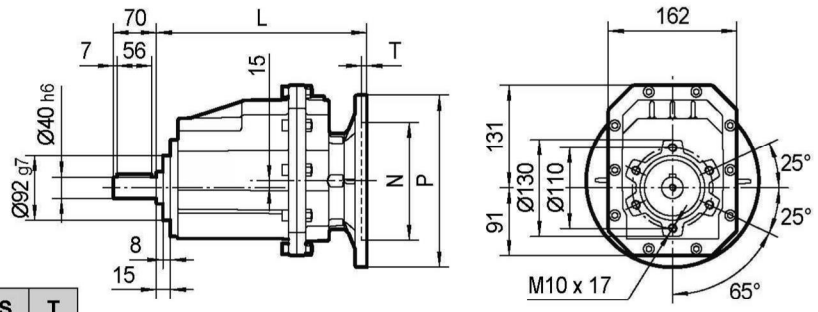

IEC	D_{E8}	F	G	P	L	M	N	S	T
P80B5	19	6	21.8	200	233	165	130	11	4
P80B14	19	6	21.8	120	233	100	80	7	4
P90B5	24	8	27.3	200	233	165	130	11	4
P90B14	24	8	27.3	140	233	115	95	9	4
P100/112B5	28	8	31.3	250	250	215	180	13.5	4.5
P100/112B14	28	8	31.3	160	250	130	110	9	4.5

Foot Code	U	V	V_1	V_2	V_3	W	X	X_1	Y	Z
PM	40	110	—	170	185	14	150	230	120	20
PB	19.5	149.5	—	180	—	14	185	215	130	20
PS	30	165	—	—	135	14	195	—	115	20

DRC..05..AD..

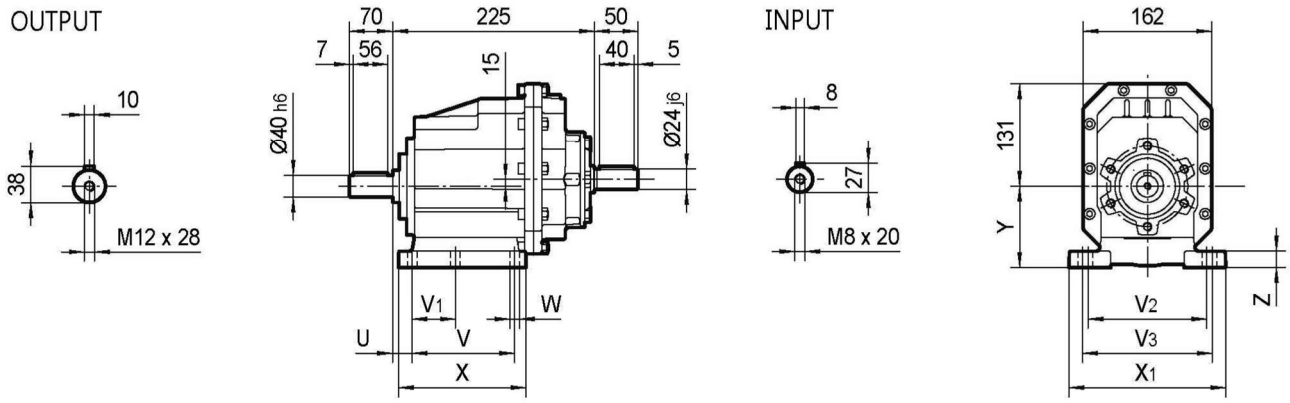

DRCF05..AD..

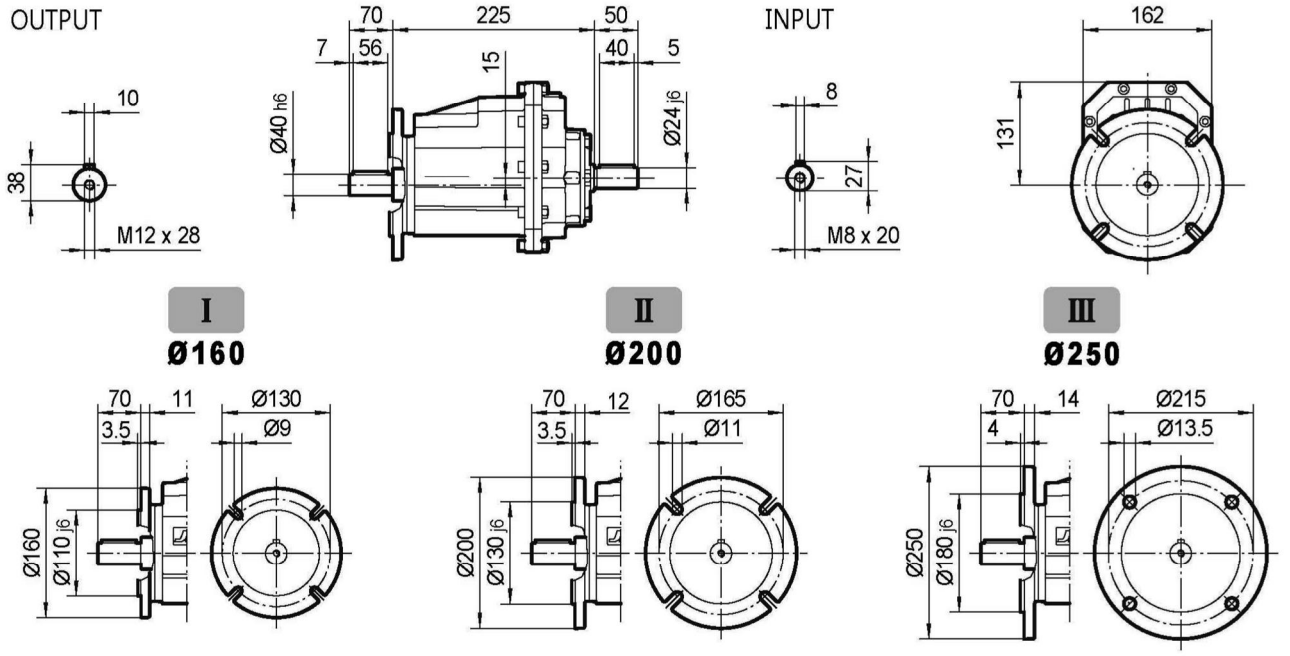

DRCZ05..AD..

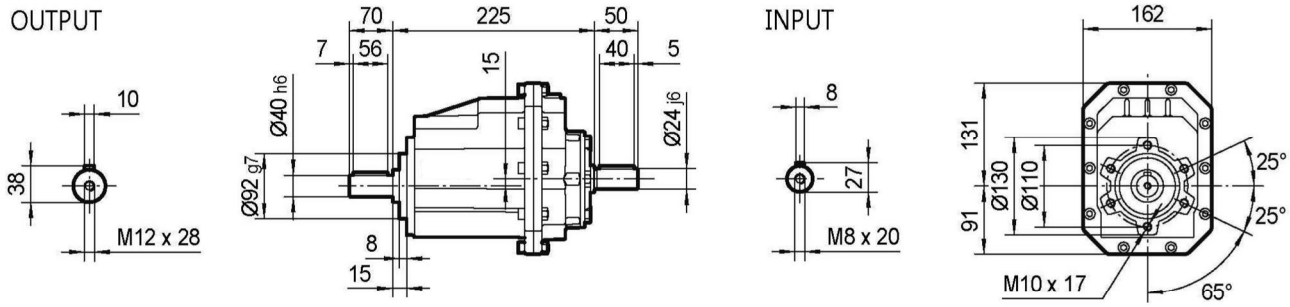

Foot Code	U	V	V_1	V_2	V_3	W	X	X_1	Y	Z
PM	40	110	—	170	185	14	150	230	120	20
PB	19.5	149.5	—	180	—	14	185	215	130	20
PS	30	165	—	—	135	14	195	—	115	20

11. MOUNTING POSITION AND TERMINAL BOX ORIENTATION - *POSIZIONI DI MONTAGGIO E DELLA MORSETTIERA*

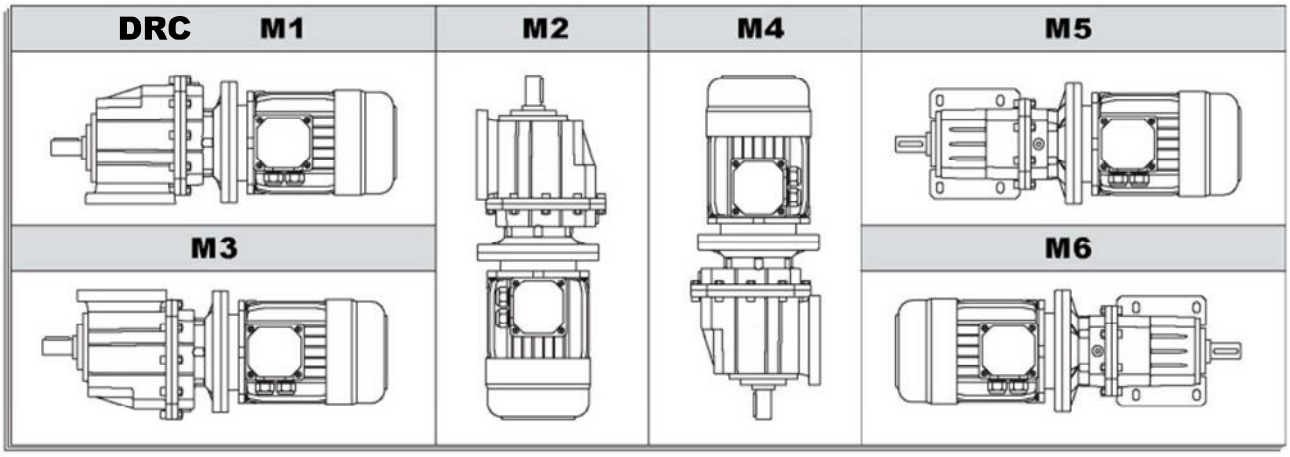

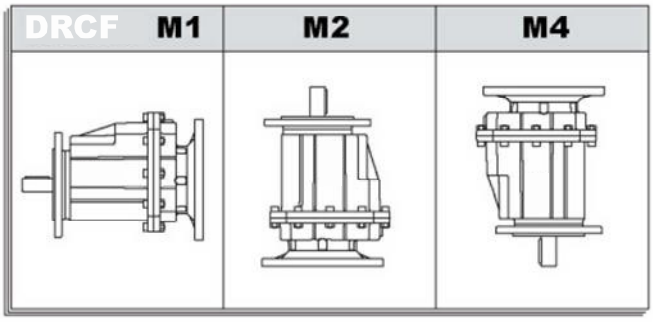

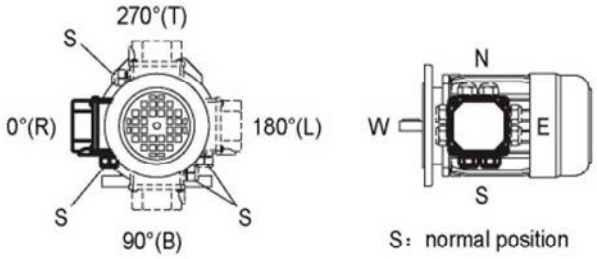

9 . Quantità di lubrificante

9.1 Informazioni generali

Si raccomanda di osservare scrupolosamente le quantità di lubrificante. La quantità precisa varia a seconda della posizione di montaggio

Vi preghiamo indicare sempre in fase d'ordine anche la posizione di montaggio. Nel caso di variazione si prega variare la quantità di lubrificante a seconda della nuova posizione seguendo la tabella per la corretta quantità

9.2 Informazioni generali

Nella tabella sotto indicata sono riportati i lubrificanti consigliati. Vedere tabella sotto riportata

9. LUBRIFICANT

9.1 General information

Unless a special arrangement is made, we supply the drives v a lubricant fill adpted for the specific gear unit and mounting position. The decisive factor is the mounting position (M1.... M specified when ordering the drive. You must adapt the lubrific fill in case of any subsequent changes made to the mounting position (Lubrificant fill quantities)

9.2 Anti-friction bearing greases

The lubrificant table on the following page shows the permi lubrificants for our gear units. Please note the following key to lubrificant table:

	Temperature	Manufacture	Style	lubrication type
rolling bearing of gear box	-20°C ~ +60°C	Mobil	Mobilux EP 2	Mineral oil
	-40°C ~ +80°C	Mobil	Mobiltemp SHC 100	Synthetic oil
rolling bearing of gear motor	-20°C ~ +80°C	Esso	Unirex EQ3	Mineral oil
	-20°C ~ +60°C	Shell	Alvania RL3	Mineral oil
	-45°C ~ .25°C	Shell	Aero Shell Grease 16	Synthetic oil

11. LUBRIFICAZIONE / LUBRICATION

11.1 Tipi di lubrificanti / Types of lubrication

	°C -50 0 +50 +100	ISO	SHELL	MOBIL	BP	tipi di lubrificante / lubrication type
DRC	标准 Standard −10 +40	VG 220	Shell Omala 220	Mobilgear 630	BP Energol GR-XP 220	Olio Minerale / Mineral oil
	−20 +25	VG 150 VG 100	Shell Omala 100	Mobilgear 627	BP Energol GR-XP 100	
	−30 +10	VG 68-46 VG 32	Shell Tellus T 32	Mobil D.T.E. 13M		
	−40 −20	VG 22 VG 15	Shell Tellus T 15	Mobil D.T.E. 11M	BP Energol HLP-HM 15	
	−40 +80	VG 220	Shell Omala HD 220	Mobil SHC 630		Olio sintetico / Synthetic oil
	−40 +40	VG 150		Mobil SHC 629		
	−40 +10	VG 32		Mobil SHC 624		

DRC Quantità di lubrificante / Lubricant fill quantity

Gear units	Quantità di lubrificante in litri - Fill quantity in liters (L)					
	M1	M2	M3	M4	M5	M6
DRC..01..	0.4	0.6	0.4	0.3	0.3	0.3
DRC..02..	0.5	0.7	0.5	0.4	0.4	0.4
DRC..03..	0.8	1.1	0.8	0.6	0.6	0.6
DRC..04..	1.2	1.6	1.0	1.0	0.9	0.9
DRC..05..	1.2	1.6	1.0	1.0	0.9	0.9

10. *MODI D'INSTALLAZIONE*

10.1 Preparazione prima dell'installazione

1) Verificare che i dati sulla targhetta siano corretti.
2) Verificare che la temperatura dell'ambiente sia corretta con quella indicata nella tabella dei lubrificanti.
3)Il riduttore non deve essere assemblato in condizioni sfavorevoli quali olio, gas ecc
4) Albero e flangia devono essere periodicamente puliti per evitare corrosione e contaminazione. Usare un solvente commerciale e assicurarsi che non entri in contatto con anelli perchè potrebbe danneggiare il materiale

10.2 Informazioni generali

1) Non comprimere piedi e flangia contro altro ed assicurarsi che soddisfino i carichi assiali e radiali consentiti.
2)Non spingere puleggia e pignoni o altro sull'albero. Potrebbero danneggiare i cuscinetti, la carcassa o l'albero
3) Prima di avviare l'applicazione varificare che l'olio sia adeguato alla posizione di montaggio. Verificare che la valvola di sfiato, ove presente, sia pulita e libera da ogni residuo di olio.

10. INSTALLATION METHODS

10.1 Preparation before the installation

1) Check if the data on the nameplates of the gear-motor matches the voltage supply system.
2) For standard gear unit, the ambient temperature must be in accordance with the corresponding lubrificant table.
3)The drive must not be assembled in conditions such as oil, gas, vapors, acids, radiation and so on.
4) Output shaft and flange surfaces must throughly cleaned to ensure the are free of anti-corrosion agents, contamination or similar. Use a commercial available solvent. Do not let the solvent come into contact with the sealing lip of the oil seals, or will damage the material!

10.2 installation of the gear units

1) Do not tighten the housing legs and mounting flanges against one another and ensure that you comply with the permitted radial load and axial load.
2) Never drive belt pulleys, couplings, pinions, etc into the shaft and by hitting them with a hammer. This will damage the bearing, housing and the shaft.
3) Prior to startup, check that if the oil level is as specified for the mounting position. If the oil checking and drain screw and the breather valves are free accessible.

Basic structure - *Esploso prodotto*

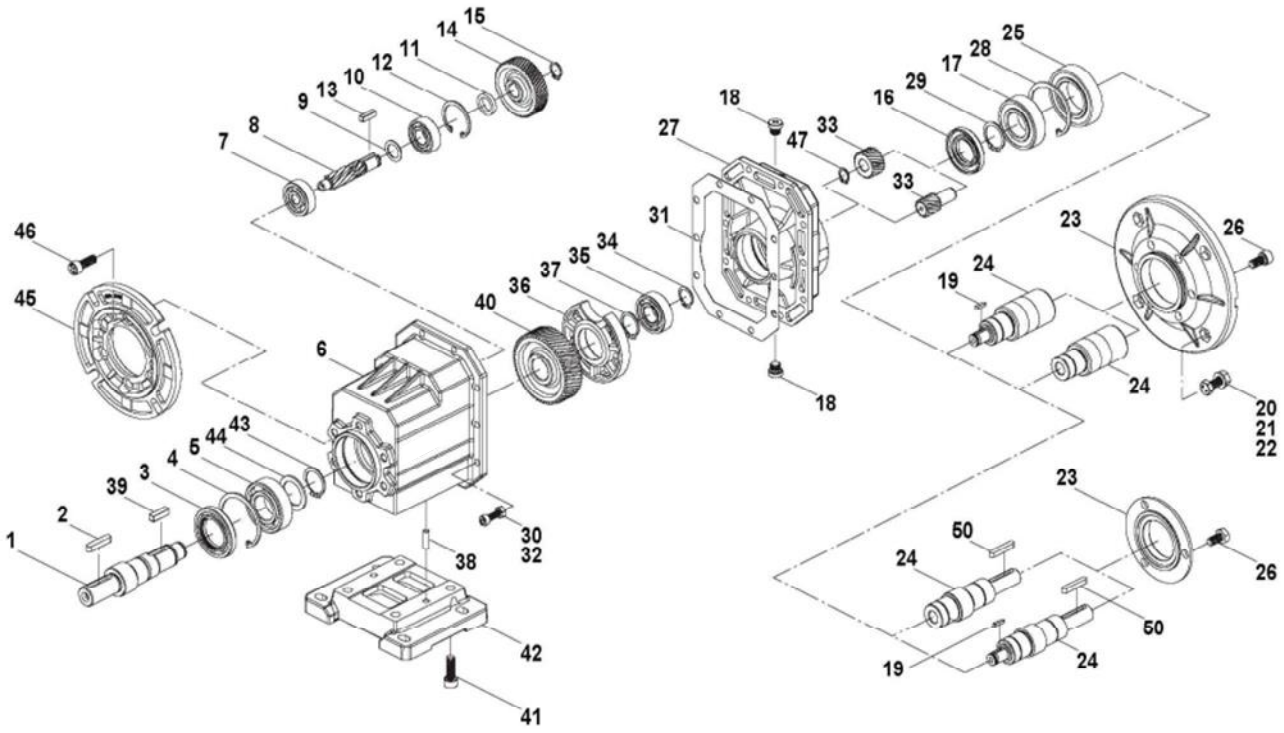

1	*Ouput shaft/Albero in uscita*	17	*Bearing / Cuscinetto*	33	*Pinion / Pignone*
2	*Key / Chiavetta*	18	*Oil plug / Tappo dell'olio*	34	*Shaft circlip / Seeger*
3	*Oil seal / Anello di tenuta*	19	*Key / Chiavetta*	35	*Bearing / Cuscinetto*
4	*Hole circlip / Seeger*	20	*Hex head bolt / Vite*	36	*Support seat / Supporto*
5	*Bearing / Cuscinetto*	21	*Washe / Vite*	37	*Shaft circlip / Seeger*
6	*Gear box / Carcassa*	22	*Hex nut / testa vite*	38	*Cylindrical pin / Perno cilindrico*
7	*Bearing / Cuscinetto*	23	*Imput flange / Flangia in ingresso*	39	*Key / Chiavetta*
8	*Pinion shaft / Albero pignone*	24	*Imput shaft / Albero in ingresso*	40	*Gear / Ruota*
9	*Anello di tenuta /* Oil seal	25	*Bearing / Cuscinetto*	41	*Socket head cap screw/Testa vite*
10	*Bearing / Cuscinetto*	26	*Socket head cap screw/Testa vite*	42	*Foot / Piedi*
11	*Spacer ring / Anello*	27	*Input cover /Coperchio in ingresso*	43	*Shaft circlip / Seeger*
12	*Hole circlip / Seeger*	28	*Hole circlip / Seeger*	44	*Washe / Vite*
13	*Key / Chiavetta*	29	*Shaft circlip / Seeger*	45	*Output flange / Flangia in uscita*
14	*Gear / Ruota*	30	*Hex nut / testa vite*	46	*Hex socket screws / Vite a brugola esagonale*
15	*Shaft circlip / Seeger*	31	*Housing gasket / Guarnizione*	47	*Shaft circlip / Seeger*
16	*Oil seal / Anello di tenuta*	32	*Socket head cap screw/Testa vite*	50	*Key / Chiavetta*

KOMPAUT S.r.l.

COMPONENTI E SOLUZIONI PER L'AUTOMAZIONE INDUSTRIALE

Via Tonale, 295/305 – 21050 – Marnate (VA) ITALIA

Tel: **0331/369.249** Email: **info@kompaut.com**

Web: **www.kompaut.com**