*12.3 TABELLA SELEZIONE RIDUTTORI / **GEAR UNIT SELECTION TABLES***

*12.3.1 **MRDB ..P(IEC)..** Prestazioni / **Performance parameter***

P_{1n} [kW]	n_2 [r/min]	M_{2n} [Nm]	i	F_{r2} [N]	f_s	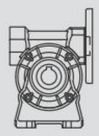	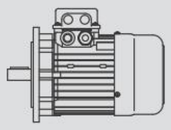	Page
0.06	19.3	14	70	1600	1.1	**MRDB30**	**56B5/B14**	**5614**	93
	22.5	13	60	1600	1.5			
	34	10	40	1650	1.9			
	45	8	30	1340	2.5			
	68	6	20	1180	2.9			
	90	5	15	1080	3.7			
	135	3	10	950	4.7			
	193	2	7	840	6.4			
	2.4	74	560	2500	0.8	**MRDB30/44**	**56B5/B14**	**5614**	100
	3.2	62	420	2500	1.0			
	3.9	53	350	2500	1.1			
	5.5	42	245	2500	1.4			
	2	116	720	3450	0.8	**MRDB30/49**	**56B5/B14**	**5614**	100
	2.5	85	540	3450	1.1			
	3.2	73	420	3450	1.3			
	4.3	53	315	3450	1.8			
	5.6	45	240	3450	2.1			
0.09	22.5	19	60	1600	1.0	**MRDB30**	**56B5/B14**	**5624**	93
	34	15	40	1410	1.3			
	45	12	30	1290	1.6			
	68	9	20	1140	2.0			
	90	7	15	1050	2.5			
	135	5	10	920	3.1			
	193	4	7	820	4.3			
	22	22	40	1560	0.9	**MRDB30**	**63B5/B14**	**6316**	93
	29.3	18	30	1440	1.2			
	44	14	20	1230	1.5			
	59	11	15	1170	1.9			
	88	8	10	1050	2.3			
	126	6	7	920	3.2			
	3.9	80	350	2500	0.7	**MRDB30/44**	**56B5/B14**	**5624**	99
	5.5	62	245	2500	1.0			
	12.6	38	70	2300	0.8	**MRDB44**	**63B5/B14**	**6316**	95
	14.7	33	60	2300	1.2			
	19.1	28	46	2300	1.4			
	25.1	23	35	2300	1.7			
	31	19	28	2300	2.0			
	44	15	20	2300	2.6			
	3.2	110	420	3450	0.9	**MRDB30/49**	**56B5/B14**	**5624**	100
	4.3	80	315	3450	1.2			
	5.6	69	240	3450	1.4			
	8.8	41	100	3300	1.3	**MRDB49**	**63B5/B14**	**6316**	97
	11.0	37	80	3300	1.6			
	12.6	34	70	3300	1.8			
	14.7	31	60	3300	2.1			
	19.6	26	45	3300	2.7			
	24.4	22	36	3300	3.4			
0.12	138	7	20	840	2.1	**MRDB30**	**56B5/B14**	**5622**	93
	275	4	10	740	3.4			
	393	3	7	660	4.7			
	33	21	40	1360	0.9	**MRDB30**	**63B5/B14**	**6314**	93
	44	17	30	1250	1.2			
	66	13	20	1110	1.4			

P_{1n} [kW]	n_2 [r/min]	M_{2n} [Nm]	i	F_{r2} [N]	fs				Page
0.12	87	10	15	1020	1.8	**MRDB30**	**63B5/B14**	**6314**	93
	131	7	10	900	2.3				
	187	5	7	810	3.1				
	29	24	30	1360	0.9	**MRDB30**	**63B5/B14**	**6326**	93
	44	18	20	1250	1.1				
	58	15	15	1130	1.4				
	87	10	10	1020	1.7				
	124	8	7	900	2.4				
	18.7	34	70	3300	0.9	**MRDB44**	**63B5/B14**	**6314**	95
	21.8	30	60	2300	1.3				
	28.5	25	46	2300	1.6				
	37	21	35	2300	1.9				
	47	17	28	2300	2.2				
	66	13	20	2100	2.9				
	94	10	14	1870	2.9				
	14.5	42	60	2300	1.1	**MRDB44**	**63B5/B14**	**6326**	95
	19	36	46	2300	1.4				
	25	30	35	2300	1.7				
	31	25	28	2300	2.0				
	44	19	20	2300	2.3				
	62	14	14	2150	2.7				
	4.2	110	315	3450	0.9	**MRDB30/49**	**63B5/B14**	**6314**	100
	5.5	94	240	3450	1.0				
	13.1	42	100	3150	1.2	**MRDB49**	**63B5/B14**	**6314**	97
	16.4	36	80	3150	1.5				
	18.7	34	70	3150	1.6				
	21.8	30	60	3150	1.9				
	29.1	25	45	3040	2.6				
	36	21	36	2830	3.3				
	8.7	55	100	3300	0.9	**MRDB49**	**63B5/B14**	**6326**	97
	10.9	50	80	3300	1.2				
0.18	90	13	30	1020	1.1	**MRDB30**	**63B5/B14**	**6312**	93
	135	10	20	900	1.4				
	180	8	15	800	1.8				
	270	5	10	710	2.2				
	386	4	7	640	3.1				
	66	19	20	1040	1.0	**MRDB30**	**63B5/B14**	**6324**	93
	88	15	15	960	1.2				
	132	11	10	860	1.5				
	189	8	7	770	2.1				
	45	24	60	2300	1.2	**MRDB44**	**63B5/B14**	**6312**	95
	59	20	46	2190	1.4				
	77	16	35	1970	1.8				
	96	14	28	1770	2.1				
	135	10	20	1590	2.8				
	193	7	14	1470	2.9				
	22	45	60	2300	0.9	**MRDB44**	**63B5/B14**	**6324**	95
	29	37	46	2500	1.1				
	38	31	35	2430	1.3				
	47	26	28	2270	1.5				
	66	20	20	2040	1.9				
	94	15	14	1830	2.0				
	132	11	10	1640	2.7				
	26	43	35	2340	1.1	**MRDB44**	**71B5/B14**	**7116**	95
	32	36	28	2290	1.4				
	45	28	20	2050	1.6				
	64	21	14	1830	1.9				
	90	16	10	1650	2.5				

P_{1n} [kW]	n_2 [r/min]	M_{2n} [Nm]	i	F_{r2} [N]	f_s				Page
0.18	16.5	54	80	3150	1.0	MRDB49	63B5/B14	6324	97
	18.9	50	70	3150	1.1				
	22	45	60	3150	1.3				
	29.3	37	45	2300	1.8				
	37	31	36	2760	2.2				
	47	26	28	2560	2.9				
	55	23	24	2430	2.7				
	73	19	18	2230	3.2				
	15	61	60	3000	1.1	MRDB49	71B5/B14	7116	97
	20	52	45	2790	1.4				
	25	43	36	2650	1.7				
	32	36	28	2450	2.3				
0.25	135	14	20	840		MRDB30	63B5/B14	6322	93
	180	11	15	780					
	270	7	10	690					
	77	23	35	1930	1.3	MRDB44	63B5/B14	6322	95
	96	19	28	1730	1.5				
	135	14	20	1550	2.0				
	193	10	14	1400	2.1				
	270	8	10	1300	2.9				
	38	43	35	2300	0.9	MRDB44	71B5/B14	7114	95
	47	36	28	2190	1.1				
	66	28	20	1970	1.4				
	94	21	14	1770	1.4				
	132	15	10	1590	1.9				
	189	11	7	1420	2.7				
	32	50	28	2300	1.0	MRDB44	71B5/B14	7126	95
	45	39	20	2190	1.1				
	64	29	14	1980	1.3				
	90	22	10	1780	1.8				
	129	16	7	1590	2.5				
	39	38	70	2650	1.1	MRDB49	63B5/B14	6322	97
	45	34	60	2500	1.3				
	60	28	45	2350	1.8				
	75	23	36	2230	2.2				
	96	19	28	2070	2.9				
	113	17	24	1930	2.8				
	22	63	60	3100	0.9	MRDB49	71B5/B14	7114	97
	29	51	45	2810	1.3				
	37	44	36	2670	1.6				
	47	36	28	2480	2.1				
	55	33	24	2360	1.9				
	73	26	18	2170	2.3				
	94	21	14	2010	3.2				
	20	72	45	3150	1.0	MRDB49	71B5/B14	7126	97
	25	60	36	3150	1.2				
	32	51	28	3150	1.6				
	38	46	24	2600	1.5				
	50	36	18	2460	1.9				
	64	29	14	2260	2.4				
	90	22	10	2040	2.9				
0.37	79	33	35	1860	0.9	MRDB49	71B5/B14	7112	95
	98	27	28	1720	1.1				
	138	21	20	1570	1.4				
	196	15	14	1400	1.5				
	275	11	10	1260	2.0				
	393	8	7	1120	2.7				

P_{1n} [kW]	n_2 [r/min]	M_{2n} [Nm]	i	F_{r2} [N]	fs				Page
0.37	69	40	20	1870	1.0	MRDB44	71B5/B14	7124	95
	98	29	14	1690	1.0				
	137	22	10	1520	1.3				
	196	16	7	1360	1.9				
	61	40	45	2270	1.2	MRDB49	71B5/B14	7112	97
	76	34	36	2180	1.5				
	98	28	28	2020	2.0				
	115	25	24	1880	1.9				
	153	19	18	1720	2.3				
	30	73	45	2680	0.9	MRDB49	71B5/B14	7124	97
	38	62	36	2530	1.1				
	49	51	28	2360	1.4				
	57	46	24	2250	1.4				
	76	37	18	2080	1.6				
	98	29	14	1940	2.2				
	137	22	10	1750	2.7				
	196	16	7	1570	3.4				
	38	67	24	2350	1.0	MRDB49	80B5/B14	8016	97
	51	53	18	2240	1.3				
	65	43	14	2070	1.7				
	91	32	10	1930	2.0				
	130	23	7	1740	2.6				
0.55	141	30	20	1490	1.0	MRDB44	71B5/B14	7122	95
	201	22	14	1350	1.0				
	281	16	10	1210	1.4				
	401	12	7	1080	1.9				
	78	49	36	2090	1.1	MRDB49	71B5/B14	7122	97
	100	40	28	1960	1.4				
	117	36	24	1800	1.3				
	156	28	18	1650	1.6				
	201	22	14	1420	2.2				
	281	16	10	1390	2.7				
	401	12	7	1250	3.5				
	49	76	28	2170	1.0	MRDB49	80B5/B14	8014	97
	58	69	24	2080	0.9				
	77	54	18	1930	1.1				
	99	43	14	1810	1.5				
	138	32	10	1650	1.8				
	197	23	7	1480	2.3				
	66	63	14	1960	1.1	MRDB49	80B5/B14	8026	97
	92	47	10	1800	1.4				
	131	34	7	1660	1.8				
0.75	117	49	24	1710	1.0	MRDB49	80B5/B14	8012	97
	156	38	18	1580	1.2				
	200	30	14	1480	1.6				
	280	22	10	1340	2.0				
	400	16	7	1200	2.6				
	100	58	14	1690	1.1	MRDB49	80B5/B14	8024	97
	140	43	10	1540	1.4				
	200	31	7	1400	1.7				
1.1	200	45	14	1370	1.1	MRDB49	80B5/B14	8022	97
	280	33	10	1250	1.3				
	400	23	7	1130	1.8				

12.3.2 MRDB ..HS.. Prestazioni / *Performance parameter*

M_{2n} [Nm]	n_1 [r/min]	i	P_{1n} [kW]	n_2 [r/min]	F_{r2} [N]	F_{r1} [N]	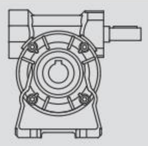	Page
12	2800	7	0.58	400	510	120	**MRDB30**	101
12	2800	10	0.41	280	620	70		
14	2800	15	0.34	187	720	—		
14	2800	20	0.26	140	820	—		
15	2800	30	0.21	93	960	—		
14	2800	40	0.16	70	1090	—		
14	2800	60	0.12	47	1270	—		
11	2800	70	0.08	40	1380	—		
16	1400	7	0.41	200	630	140	**MRDB30**	101
16	1400	10	0.30	140	770	80		
18	1400	15	0.24	93	910	—		
18	1400	20	0.19	70	1030	—		
20	1400	30	0.15	47	1200	—		
19	1400	40	0.12	35	1360	—		
19	1400	60	0.09	23.3	1590	—		
15	1400	70	0.07	20	1600	—		
18	900	7	0.30	129	730	150	**MRDB30**	101
18	900	10	0.22	90	900	150		
20	900	15	0.17	60	1060	—		
20	900	20	0.14	45	1200	—		
22	900	30	0.12	30	1400	—		
20	900	40	0.09	23	1590	—		
20	900	60	0.07	15	1650	—		
17	900	70	0.05	13	1700	—		
20	500	7	0.19	71	920	150	**MRDB30**	101
20	500	10	0.14	50	1120	150		
22	500	15	0.11	33	1320	150		
22	500	20	0.09	25	1490	150		
24	500	30	0.07	16.7	1700	—		
22	500	40	0.06	12.5	1700	—		
22	500	60	0.05	8.3	1700	—		
19	500	70	0.04	7	1700	—		

M_{2n} [Nm]	n_1 [r/min]	i	P_{1n} [kW]	n_2 [r/min]	F_{r2} [N]	F_{r1} [N]	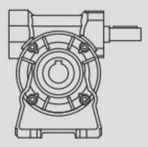	Page
22	2800	7	1.1	400	950	220	**MRDB44**	101
22	2800	10	0.74	280	1150	220		
22	2800	14	0.55	200	1340	220		
29	2800	20	0.52	140	1490	220		
29	2800	28	0.40	100	1710	220		
29	2800	35	0.33	80	1870	220		
29	2800	46	0.27	61	2080	220		
29	2800	60	0.22	47	2290	220		
22	2800	70	0.15	40	2300	220		
21	2800	100	0.11	28	2300	220		
29	1400	7	0.71	200	1180	220	**MRDB44**	101
29	1400	10	0.51	140	1430	220		
29	1400	14	0.37	100	1680	220		
39	1400	20	0.37	70	1860	220		
39	1400	28	0.29	50	2140	220		
39	1400	35	0.25	40	2300	220		
39	1400	46	0.19	30	2300	220		
39	1400	60	0.16	23.3	2300	220		
29	1400	70	0.11	20	2300	220		
28	1400	100	0.09	14	2300	220		
39	900	7	0.63	129	1300	220	**MRDB44**	101
39	900	10	0.45	90	1610	220		
39	900	14	0.34	64	1890	220		
45	900	20	0.29	45	2160	220		
49	900	28	0.24	32	2300	220		
49	900	35	0.20	25.7	2300	220		
49	900	46	0.17	19.6	2300	220		
45	900	60	0.13	15	2300	200		
39	900	70	0.10	12.9	2300	220		
30	900	100	0.06	9	2300	220		
45	500	7	0.41	71	1610	220	**MRDB44**	101
45	500	10	0.29	50	1980	220		
50	500	14	0.25	36	2280	220		
50	500	20	0.18	25	2500	220		
55	500	28	0.16	17.9	2500	220		
55	500	35	0.14	14.3	2500	220		
50	500	46	0.10	10.9	2500	220		
50	500	60	0.09	8.3	2500	220		
45	500	70	0.07	7.1	2500	220		
32	500	100	0.04	5	2500	220		

M_{2n} [Nm]	n_1 [r/min]	i	P_{1n} [kW]	n_2 [r/min]	F_{r2} [N]	F_{r1} [N]	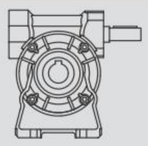	Page
41	2800	7	2	400	950	400	**MRDB49**	101
44	2800	10	1.5	280	1140	400		
49	2800	14	1.2	200	1310	400		
44	2800	18	0.87	156	1520	400		
47	2800	24	0.73	117	1670	400		
56	2800	28	0.78	100	1740	400		
52	2800	36	0.59	78	1970	400		
49	2800	45	0.46	62	2180	400		
44	2800	60	0.34	47	2480	400		
41	2800	70	0.28	40	2650	400		
41	2800	80	0.25	35	2780	400		
37	2800	100	0.20	28	3050	400		
54	1400	7	1.3	200	1170	400	**MRDB49**	101
59	1400	10	1.0	140	1410	400		
65	1400	14	0.90	100	1630	400		
59	1400	18	0.60	78	1890	400		
63	1400	24	0.50	58	2110	400		
74	1400	28	0.55	50	2170	400	**MRDB49**	101
69	1400	36	0.42	39	2460	400		
65	1400	45	0.33	31	2725	400		
59	1400	60	0.25	23.3	3100	400		
55	1400	70	0.21	20	3150	400		
54	1400	80	0.19	17.5	3150	400		
49	1400	100	0.13	14	3150	400		
61	900	7	0.97	129	1370	400	**MRDB49**	101
64	900	10	0.75	90	1670	400		
71	900	14	0.61	64	1920	400		
68	900	18	0.47	50	2190	400		
68	900	24	0.36	38	2480	400		
82	900	28	0.41	32	2540	400		
75	900	36	0.31	25	2880	400		
71	900	45	0.25	20	3190	400		
64	900	60	0.19	15	3300	400		
60	900	70	0.16	12.9	3300	400		
58	900	80	0.14	11.3	3300	400		
52	900	100	0.11	9	3300	400		
74	500	7	0.67	71	1670	400	**MRDB49**	101
74	500	10	0.49	50	2060	400		
78	500	14	0.39	36	2400	400		
74	500	18	0.30	27.8	2730	400		
74	500	24	0.24	20.8	3090	400		
88	500	28	0.26	17.9	3180	400		
80	500	36	0.20	13.9	3450	400		
78	500	45	0.17	11.1	3450	400		
69	500	60	0.12	8.3	3450	400		
69	500	70	0.11	7.1	3450	400		
59	500	80	0.09	6.3	3450	400		
59	500	100	0.08	5	3450	400		

12.3.3 MRDB/MRDB Prestazioni / *Performance parameter*

M_{2n} [Nm]	n_1 [r/min]	i	P_{1n} [kW]	n_2 [r/min]	F_{r2} [N]	F_{r1} [N]		Page
60	1400	245	0.09	5.7	2500	140	**MRDB30/44**	102
60	1400	350	0.07	4.0	2500	80		
60	1400	420	0.06	3.3	2500	—		
60	1400	560	0.05	2.5	2500	—		
60	1400	700	0.04	2.0	2500	—		
60	1400	840	0.04	1.7	2500	—		
60	1400	1120	0.03	1.3	2500	—		
60	1400	1680	0.02	0.83	2500	—		
60	1400	2100	0.02	0.67	2500	—		
70	900	245	0.07	3.7	2500	150	**MRDB30/44**	102
70	900	350	0.05	2.6	2500	150		
70	900	420	0.04	2.1	2500	—		
70	900	560	0.04	1.6	2500	—		
70	900	700	0.03	1.3	2500	—		
70	900	840	0.03	1.1	2500	—		
70	900	1120	0.02	0.8	2500	—		
70	900	1680	0.02	0.54	2500	—		
70	900	2100	0.02	0.43	2500	—		
95	1400	240	0.13	5.8	3450	80	**MRDB30/49**	102
95	1400	315	0.11	4.4	3450	140		
95	1400	420	0.08	3.3	3450	—		
95	1400	540	0.07	2.6	3450	—		
95	1400	720	0.05	1.9	3450	—		
95	1400	900	0.05	1.6	3450	—		
95	1400	1120	0.04	1.3	3450	—		
95	1400	1440	0.04	0.97	3450	—		
95	1400	2160	0.03	0.65	3450	—		
95	1400	2700	0.03	0.52	3450	—		
100	900	240	0.09	3.8	3450	150	**MRDB30/49**	102
100	900	315	0.07	2.9	3450	150		
100	900	420	0.06	2.1	3450	—		
100	900	540	0.05	1.7	3450	—		
100	900	720	0.04	1.3	3450	—		
100	900	900	0.04	1.0	3450	—		
100	900	1120	0.03	0.80	3450	—		
100	900	1440	0.03	0.63	3450	—		
100	900	2160	0.02	0.42	3450	—		
100	900	2700	0.02	0.33	3450	—		

12.4 DIMENSIONI / *OUTLINE DIMENSION SHEET*

12.4.1 *MRDB..* Dimensioni / *Outline dimension*

MRDB30A..P(IEC)

Piedi / *Input adapters*

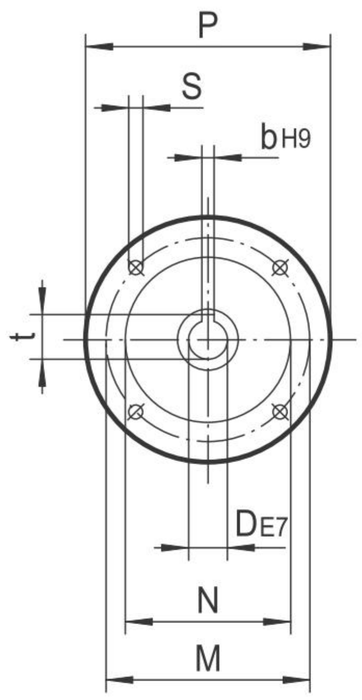

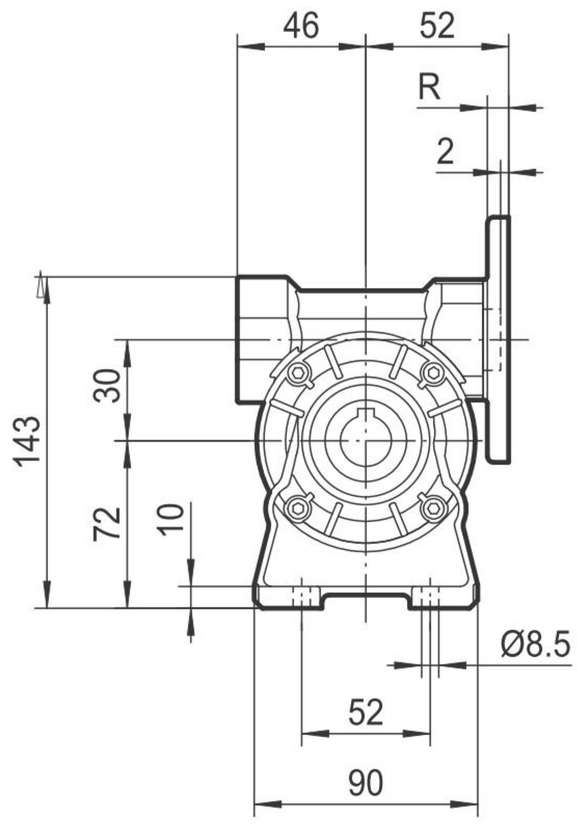

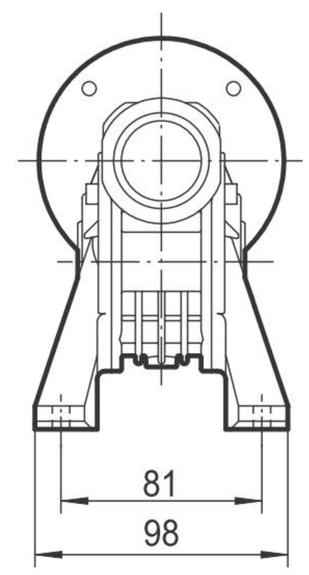

Dimensioni albero / *Worm output shaft*

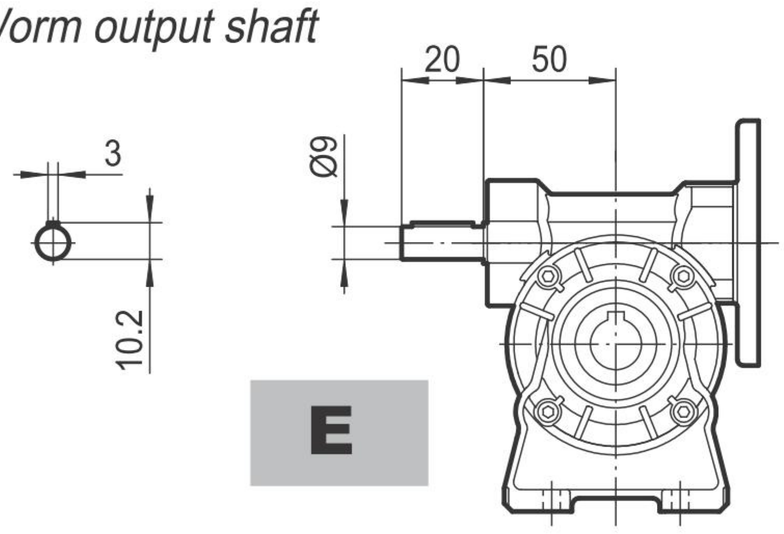

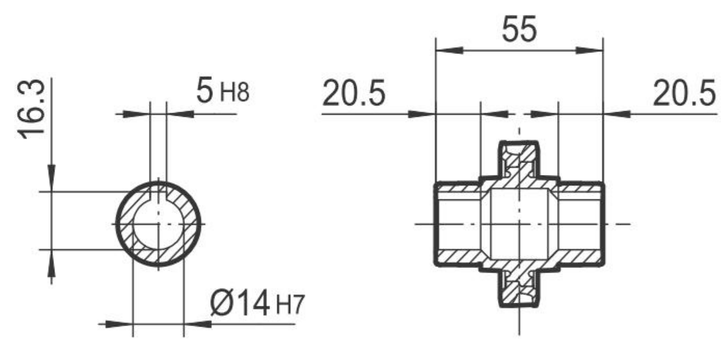

MRDB30N..

MRDB30V..

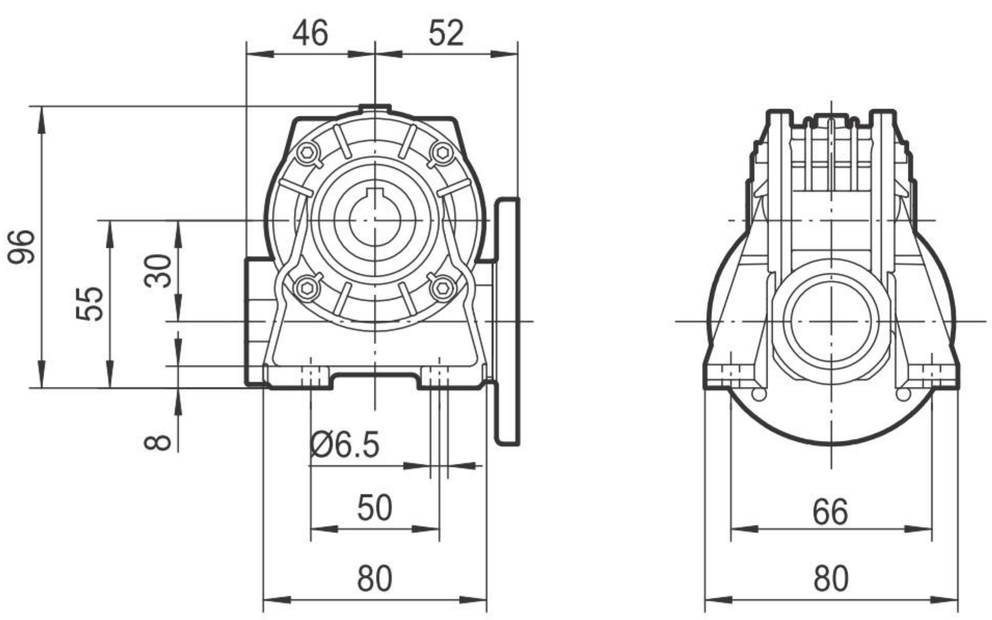

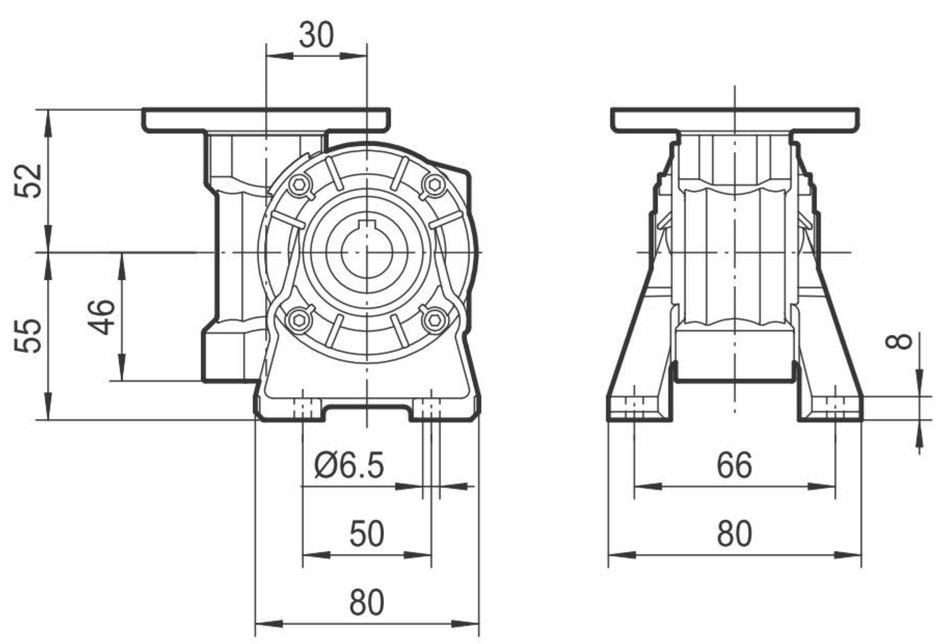

IEC	D_{E7}	b	t	P	M	N	R	S
56B5	9	3	10.4	120	100	80	7	7
56B14	9	3	10.4	80	65	50	7	5.5
63B5	11	4	12.8	140	115	95	8	9.5
63B14	11	4	12.8	90	75	60	7	5.5

MRDB 30P..P(IEC)

Piedi / *Input adapters*

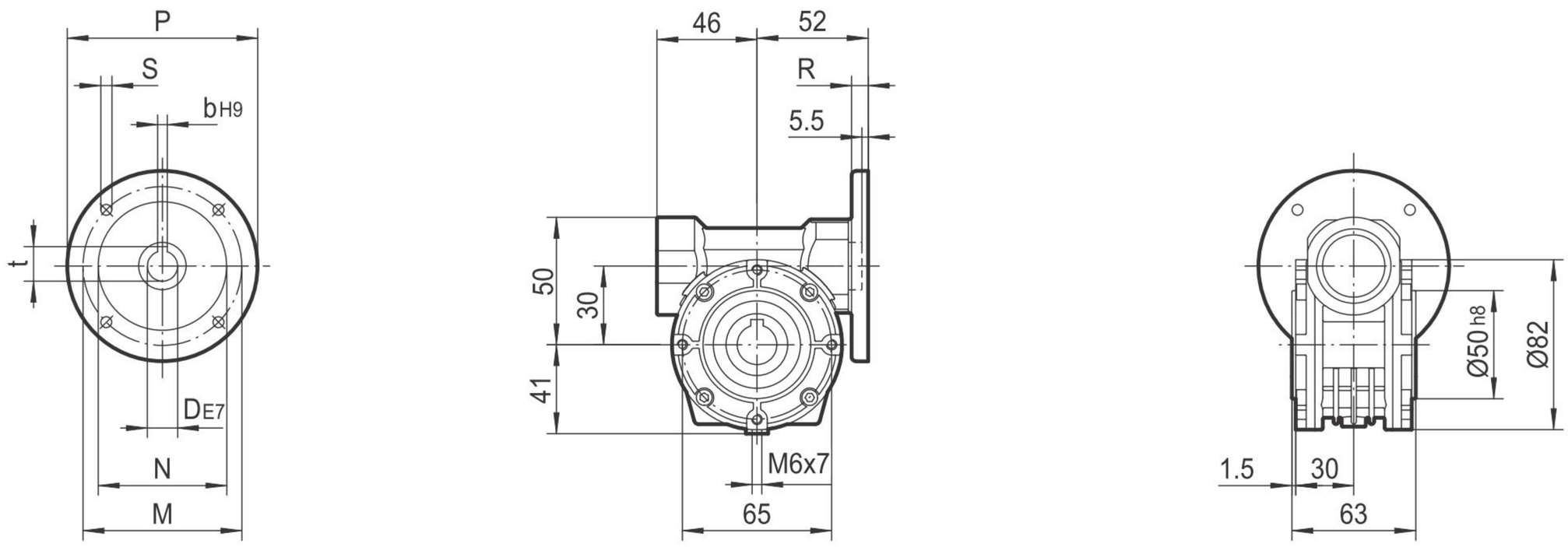

Dimensioni albero / *Worm output shaft*

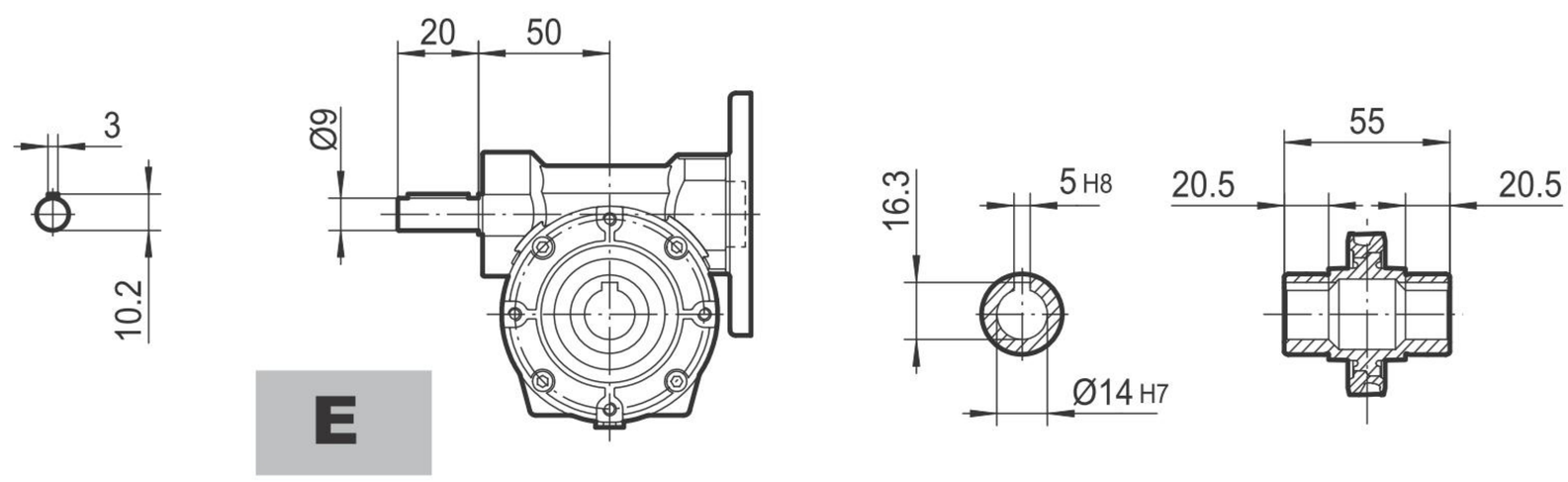

MRDB30F..

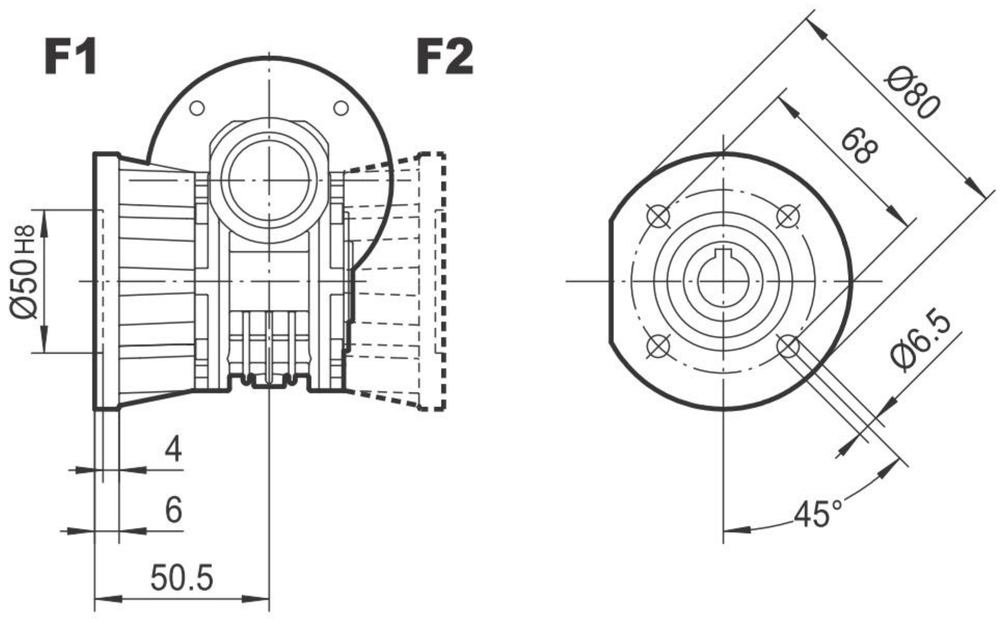

IEC	D E7	b	t	P	M	N	R	S
56B5	9	3	10.4	120	100	80	7	7
56B14	9	3	10.4	80	65	50	7	5.5
63B5	11	4	12.8	140	115	95	8	9.5
63B14	11	4	12.8	90	75	60	7	5.5

MRDB44A.. P(IEC)

Piedi / *Input adapters*

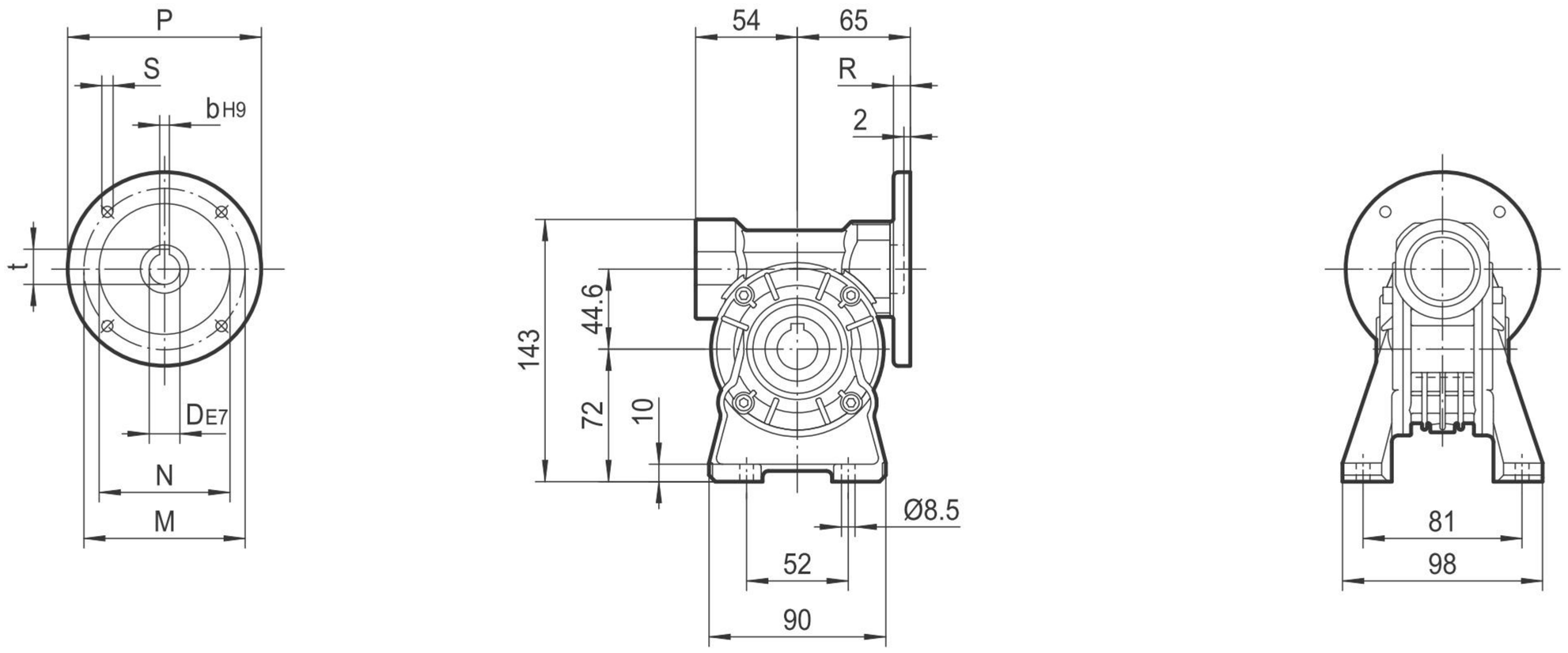

Dimensioni albero / *Worm output shaft*

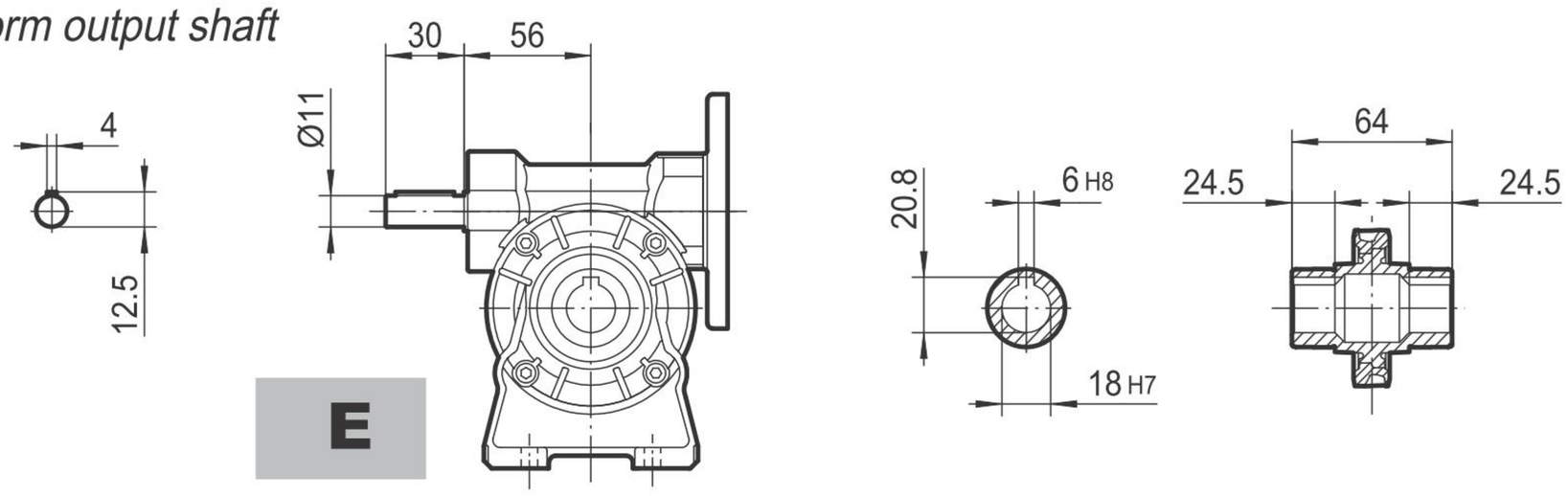

MRDB44N..

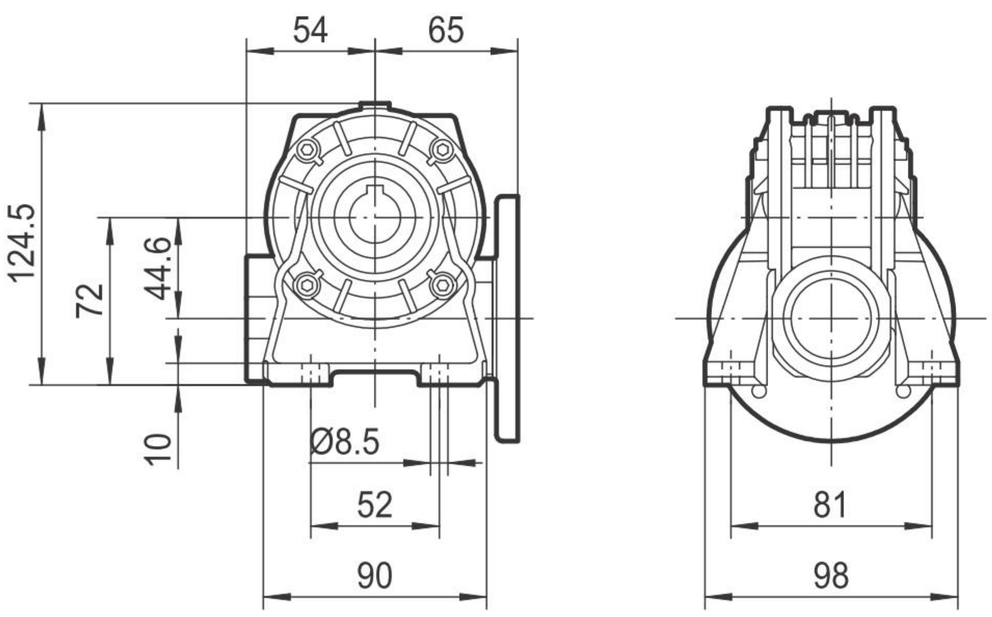

MRDB44V..

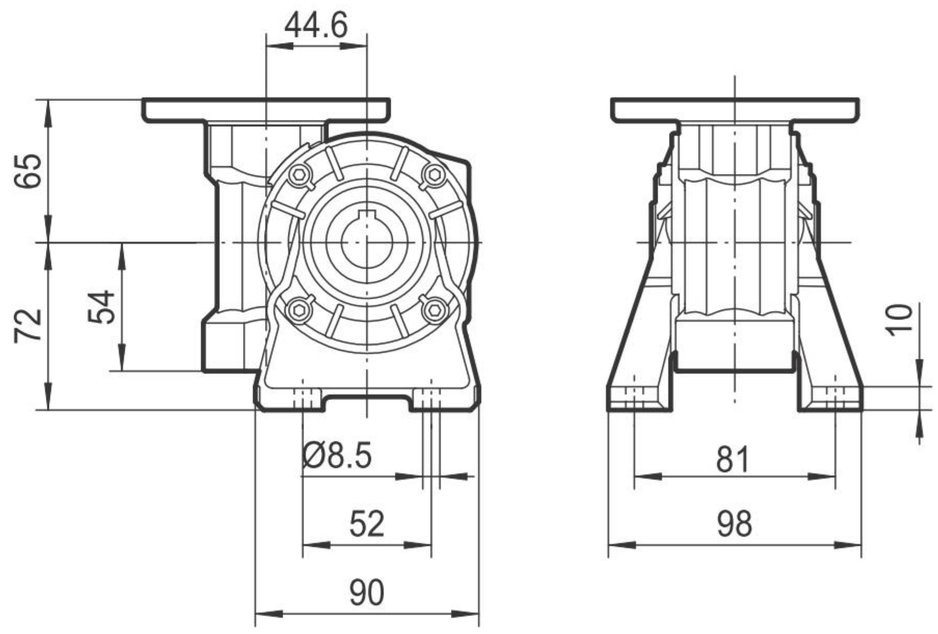

IEC	D_{E7}	b	t	P	M	N	R	S
63B5	11	4	12.8	140	115	95	10	9.5
63B14	11	4	12.8	90	75	60	8	5.5
71B5	14	5	16.3	160	130	110	10	9.5
71B14	14	5	16.3	105	85	70	10	7

MRDB44P..P(IEC)

Piedi / *Input adapters*

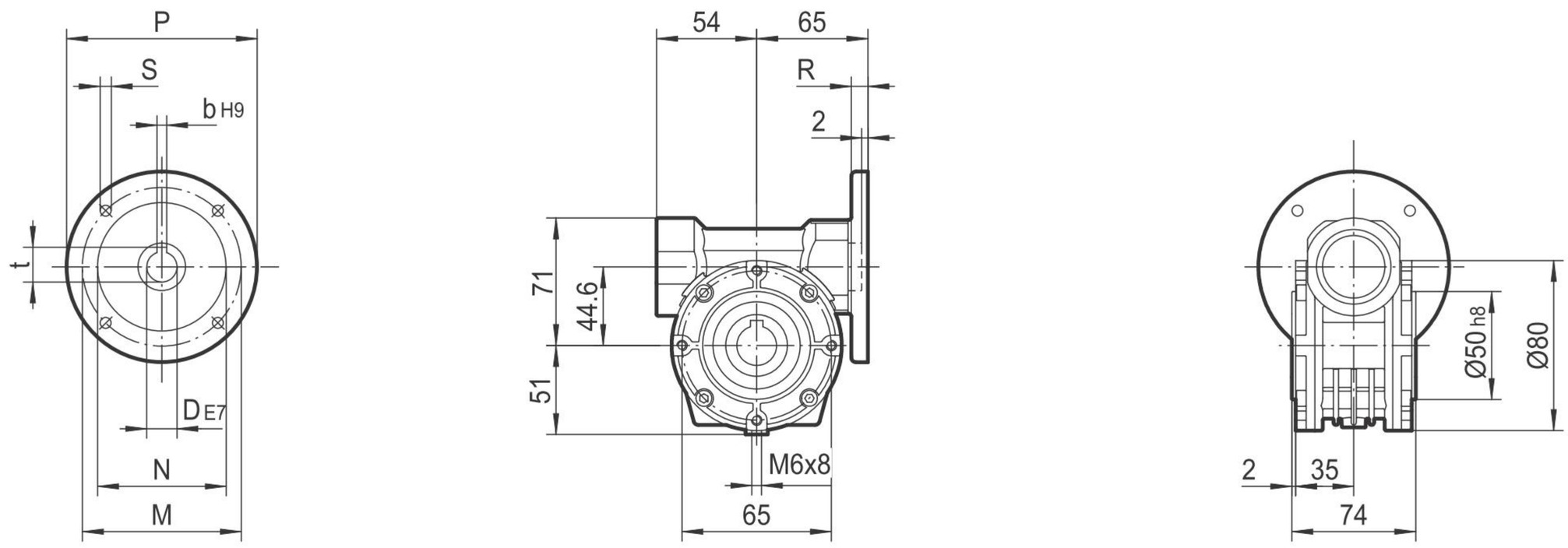

Dimensione albero / *Worm output shaft*

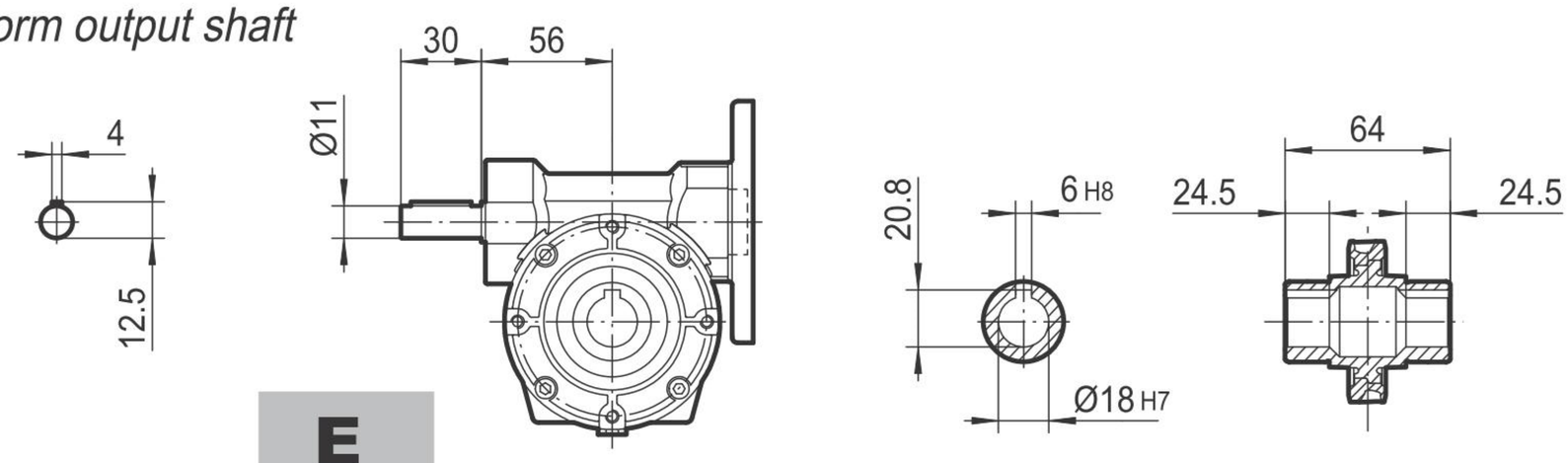

E

MRDB44F..

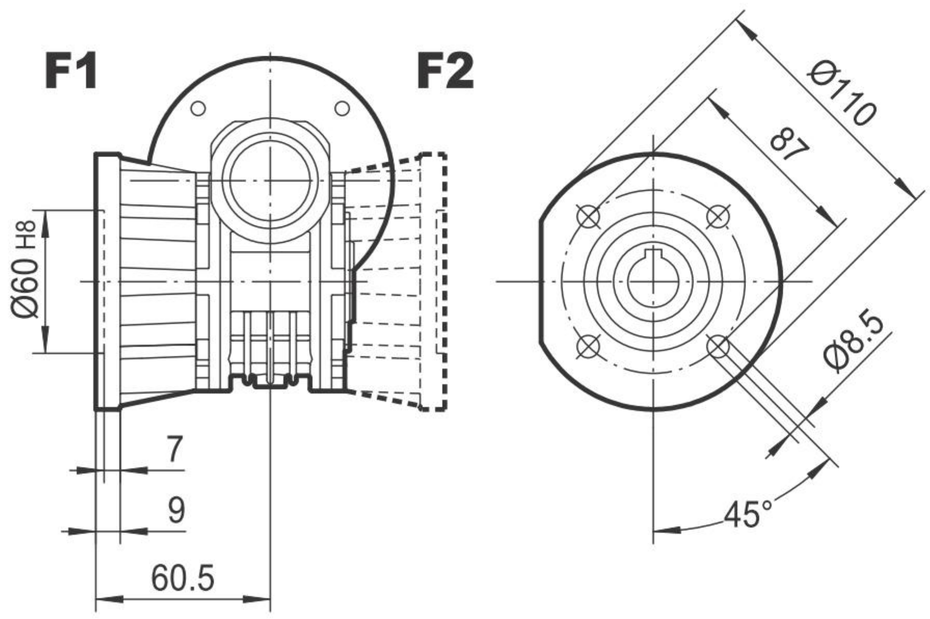

MRDB44FA..

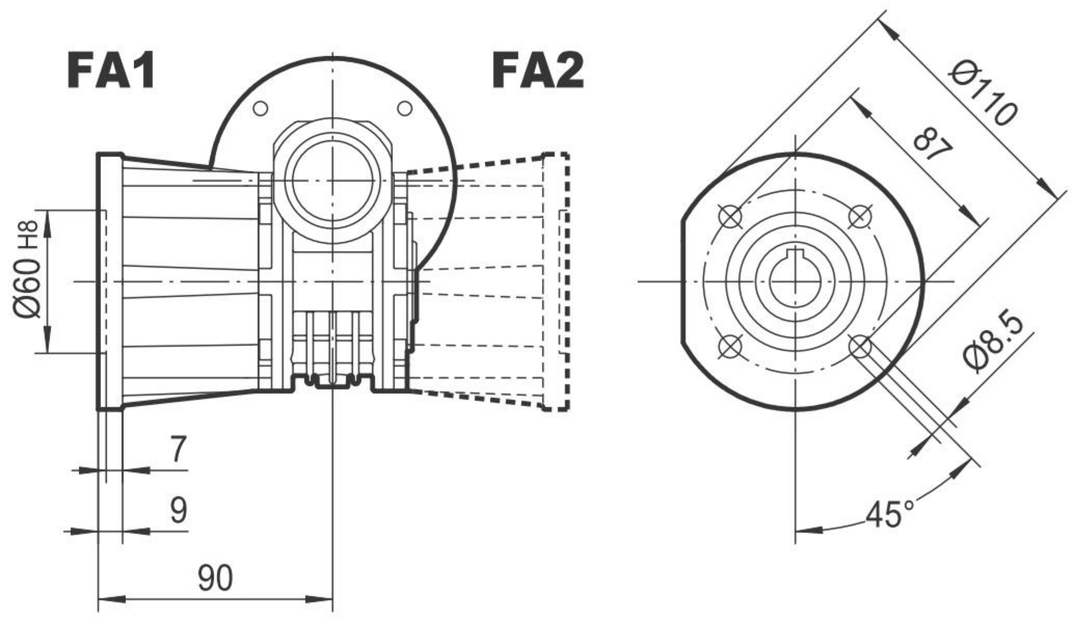

IEC	D E7	b	t	P	M	N	R	S
63B5	11	4	12.8	140	115	95	10	9.5
63B14	11	4	12.8	90	75	60	8	5.5
71B5	14	5	16.3	160	130	110	10	9.5
71B14	14	5	16.3	105	85	70	10	7

MRDV49A.. P(IEC)

Piedi / *Input adapters*

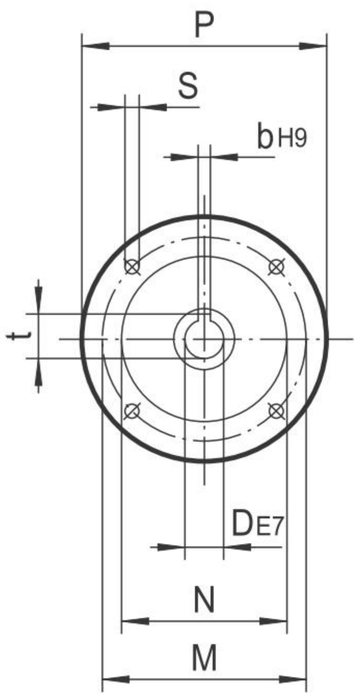

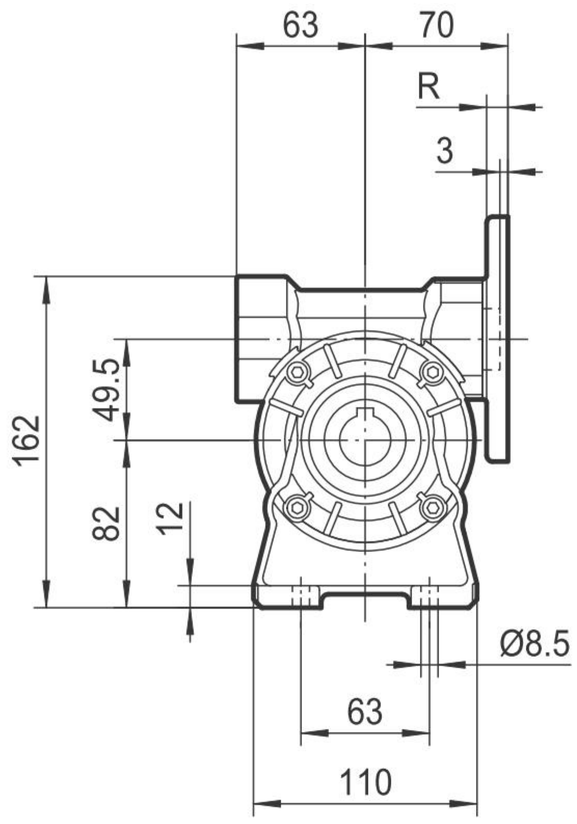

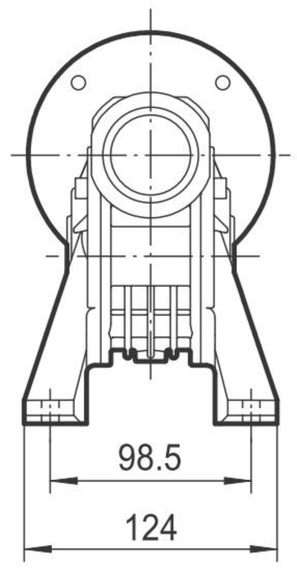

Dimensioni albero / *Worm output shaft*

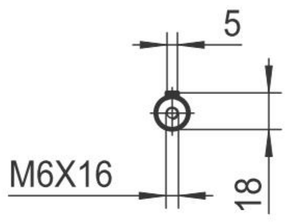

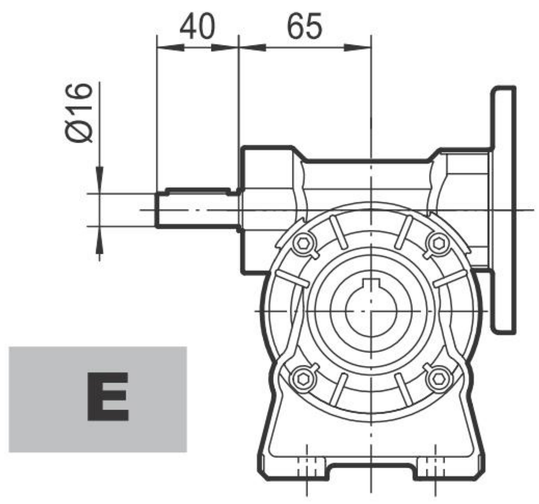

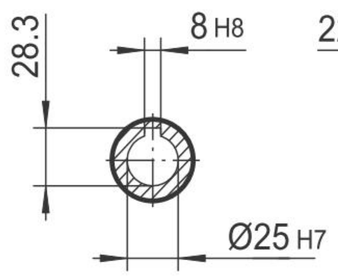

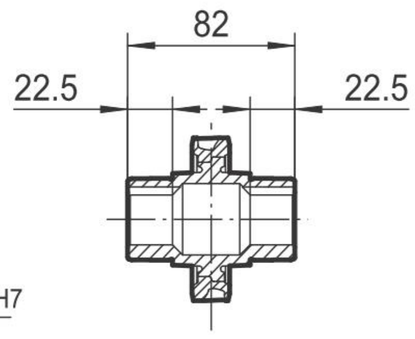

MRDB49N..

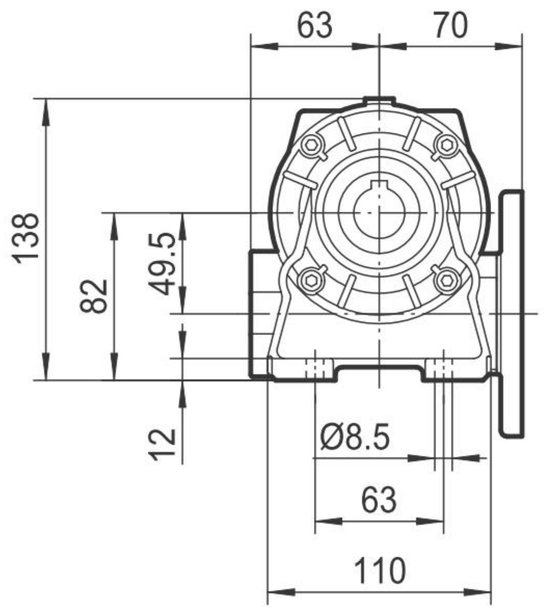

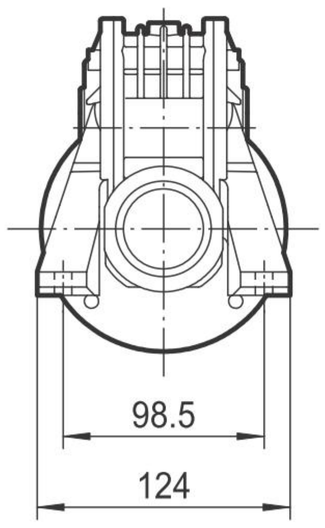

MRDB49V..

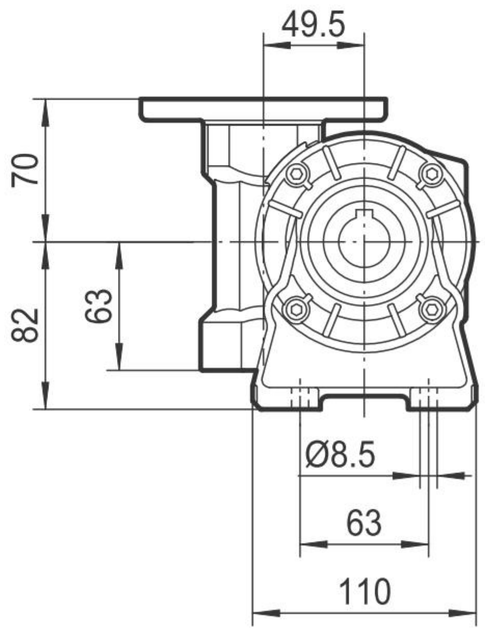

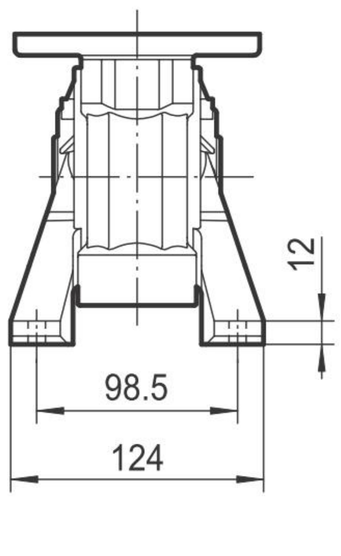

IEC	D_{E7}	b	t	P	M	N	R	S
63B5	11	4	12.8	140	115	95	10.5	9.5
63B14	11	4	12.8	90	75	60	7	6
71B5	14	5	16.3	160	130	110	10.5	9.5
71B14	14	5	16.3	105	85	70	10.5	6.5
80B5	19	6	21.8	200	165	130	10	11.5
80B14	19	6	21.8	120	100	80	10	7

MRDB49P..P(IEC)

Piedi / *Input adapters*

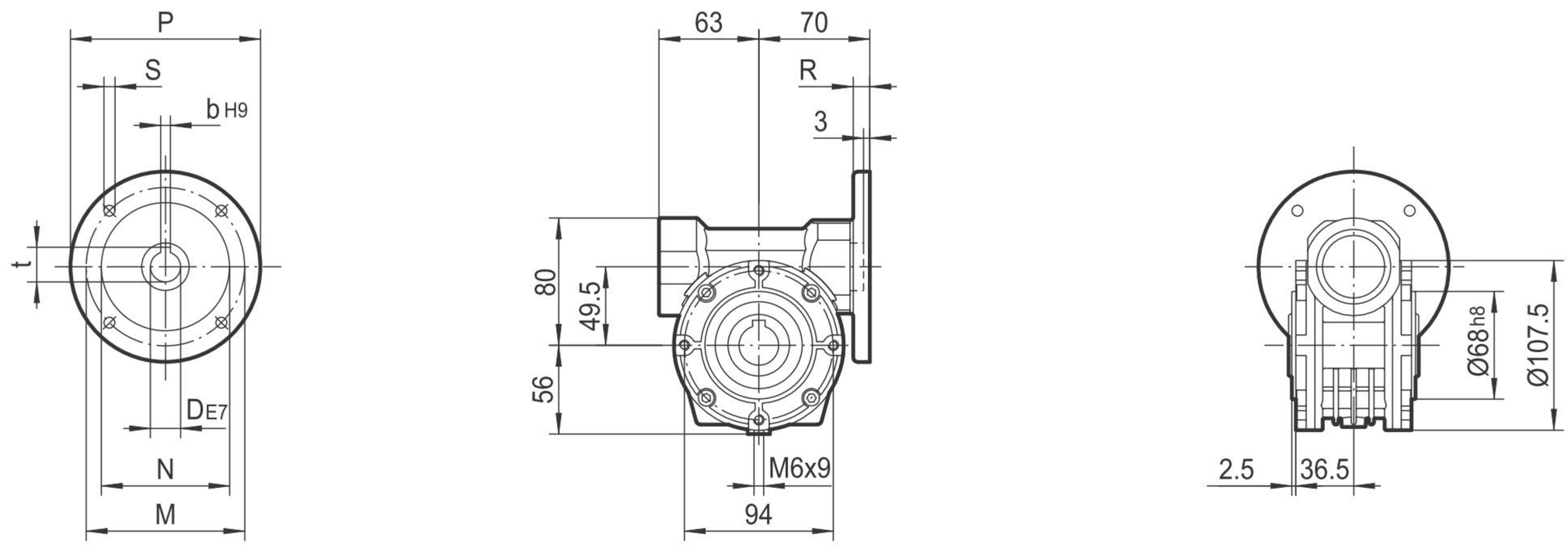

Dimensioni albero / *Worm output shaft*

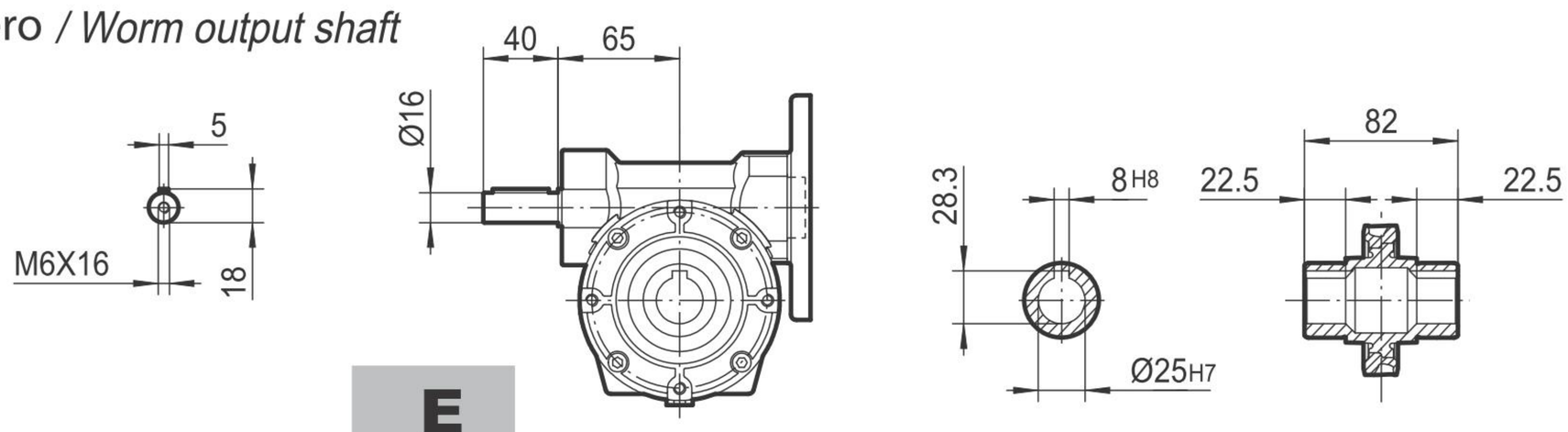

E

MRDB49F..

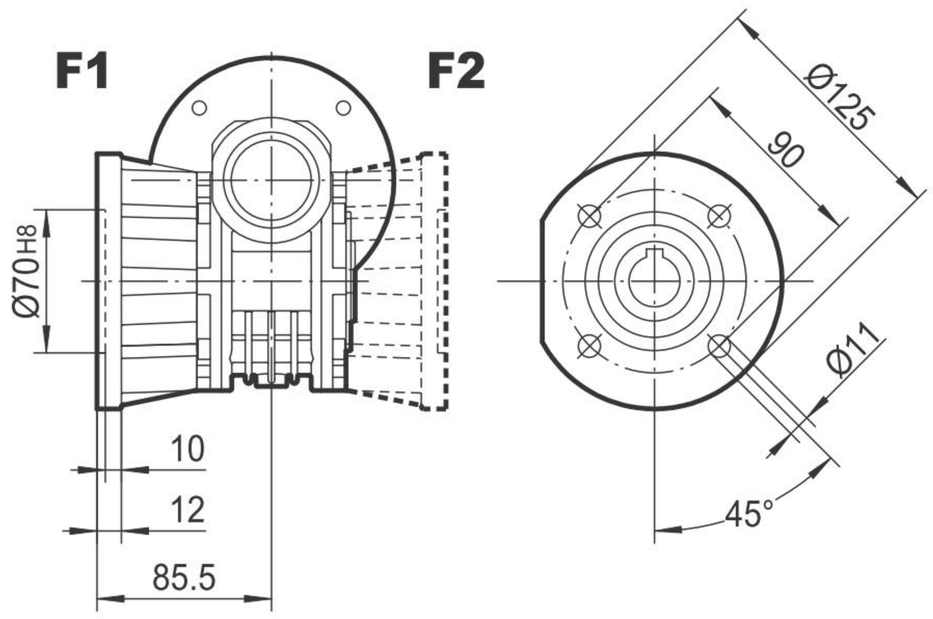

MRDB49FA..

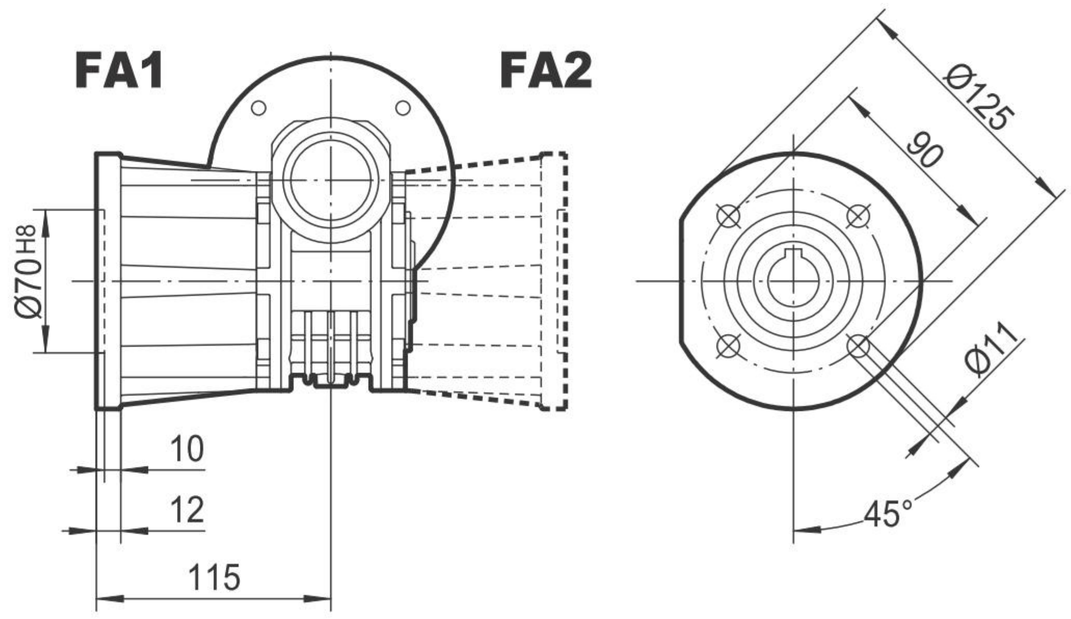

IEC	D E7	b	t	P	M	N	R	S
63B5	11	4	12.8	140	115	95	10.5	9.5
63B14	11	4	12.8	90	75	60	7	6
71B5	14	5	16.3	160	130	110	10.5	9.5
71B14	14	5	16.3	105	85	70	10.5	6.5
80B5	19	6	21.8	200	165	130	10	11.5
80B14	19	6	21.8	120	100	80	10	7

12.4.2 MRDB / MRDB.. Dimensioni / *Outline dimension*

- Per le dimensioni delle flange in uscita andare a pag 13-18
- Per le dimensioni dell' albero vedere pag. 23
- Per le dimensioni dell' albero doppio vedere pag. 23

- For the dimensions of the tput flanges, please refer to pages 93-98.
- For the dimensions of the hollow shafts , please refer to pages 93-98.
- For the dimensions of the double extention warm shafts, please refer to page 103.

MRDB30/44..

A

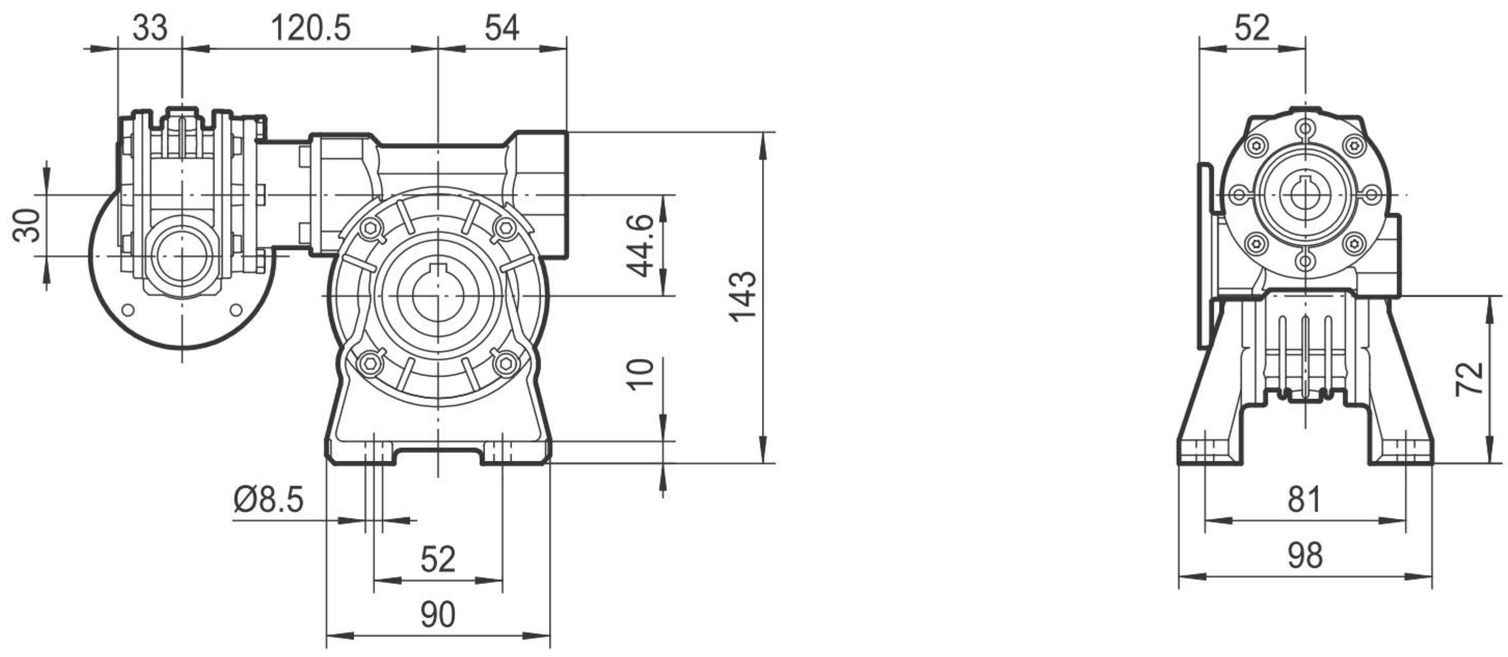

P

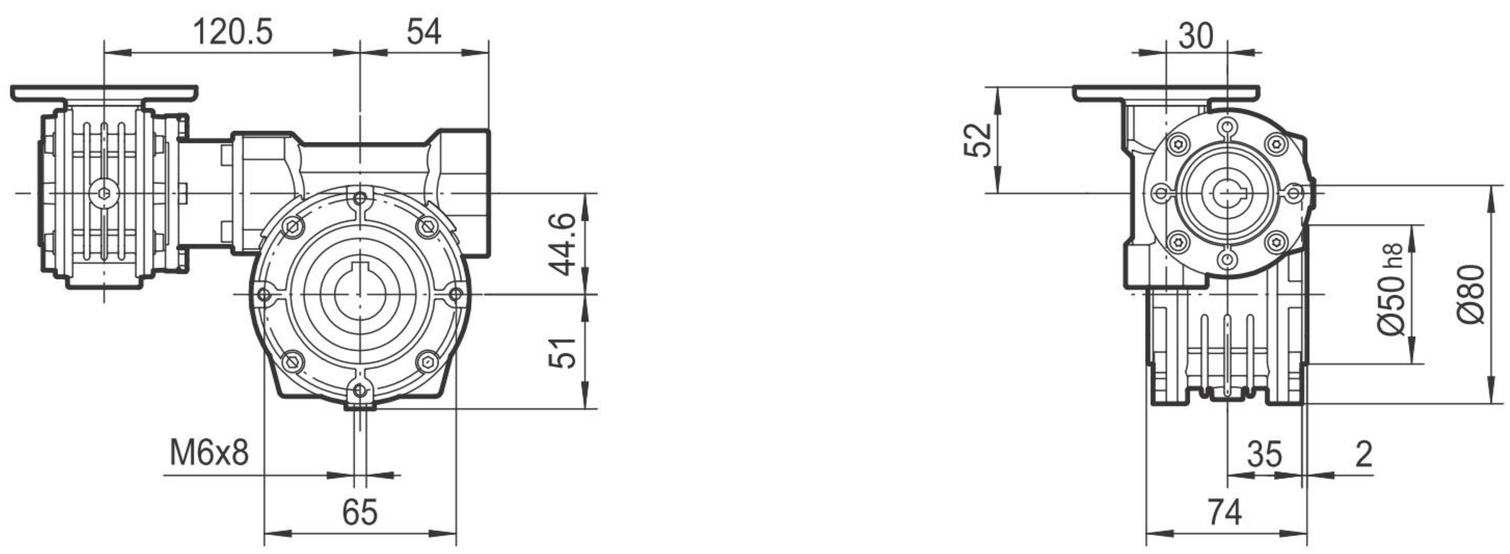

F_

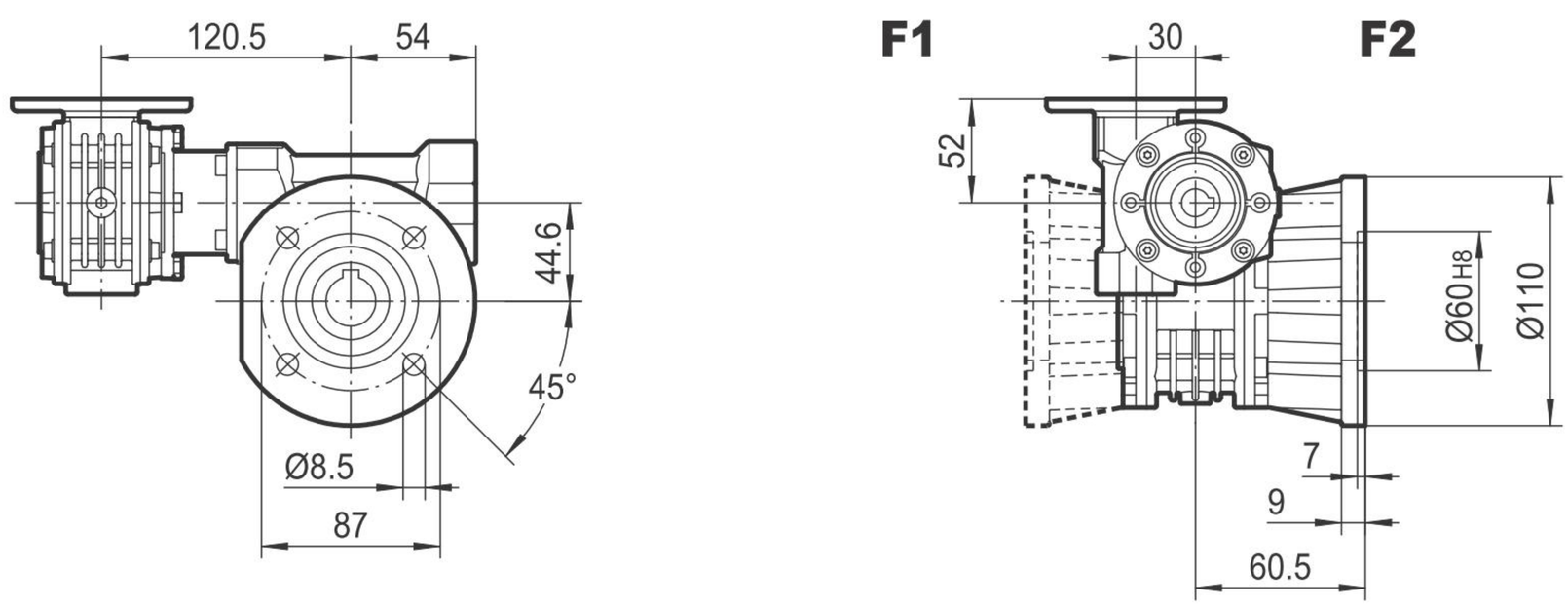

FA_

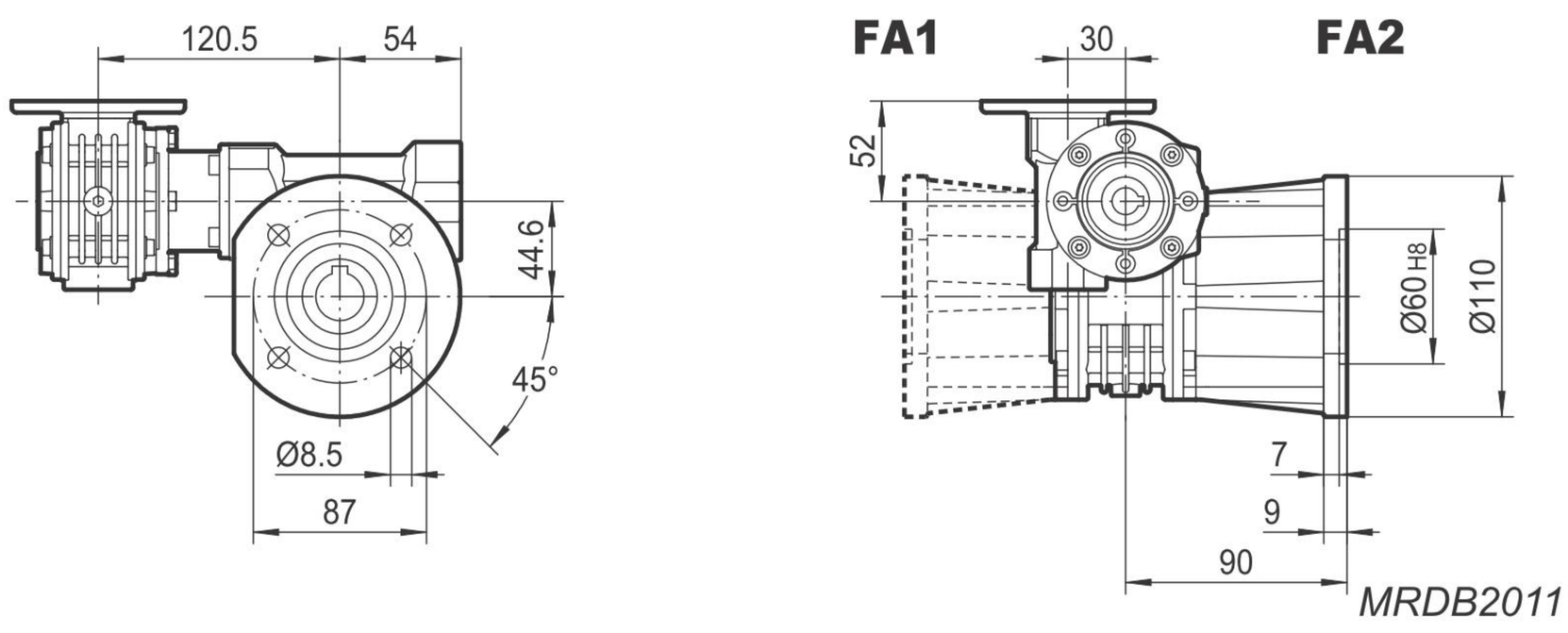

MRDB30/49..

A

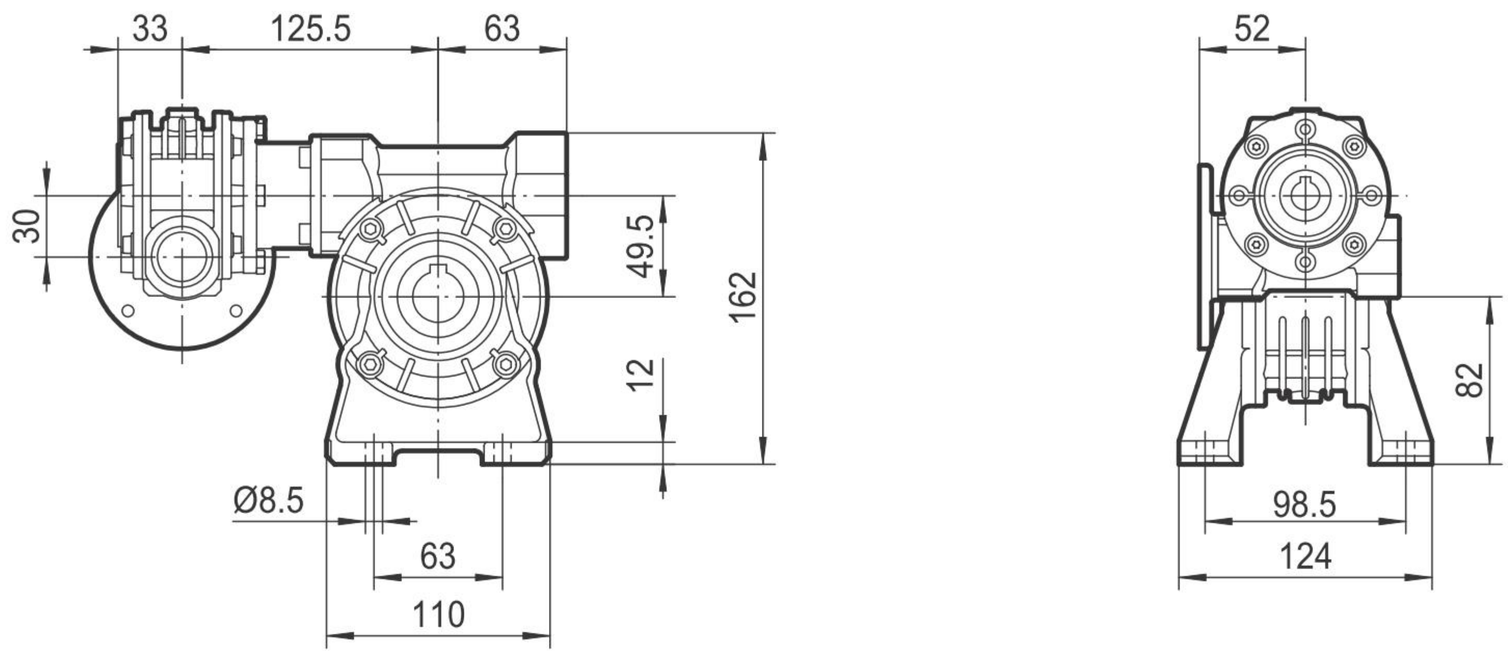

P

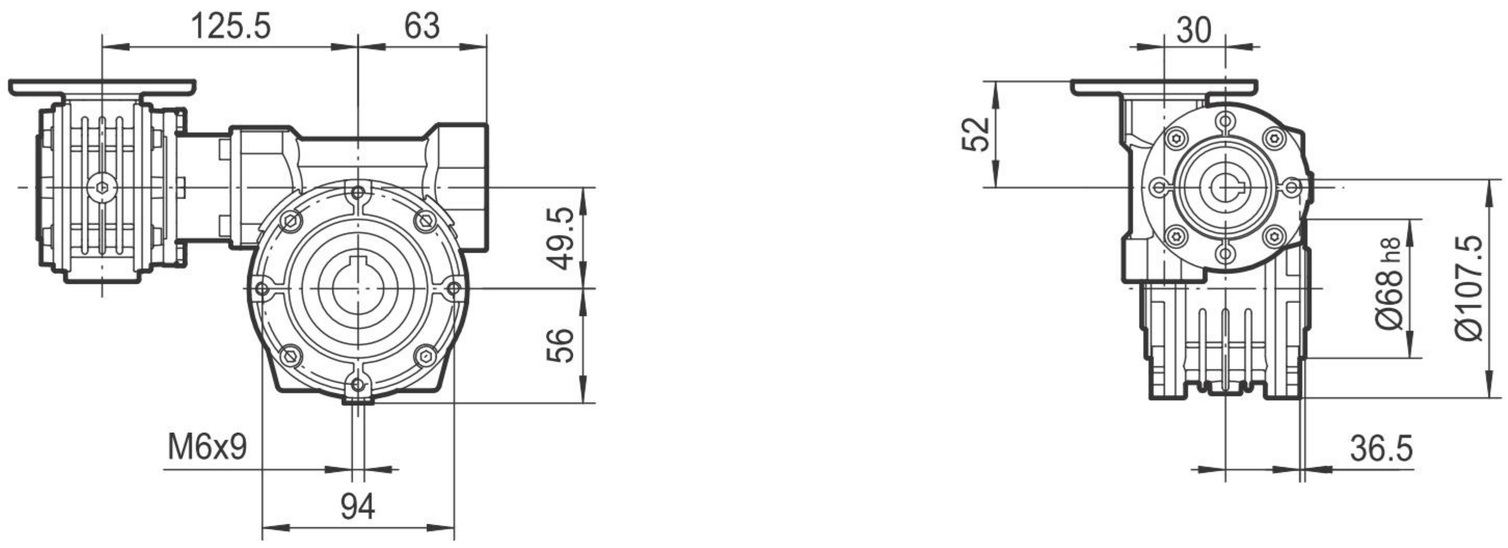

F_

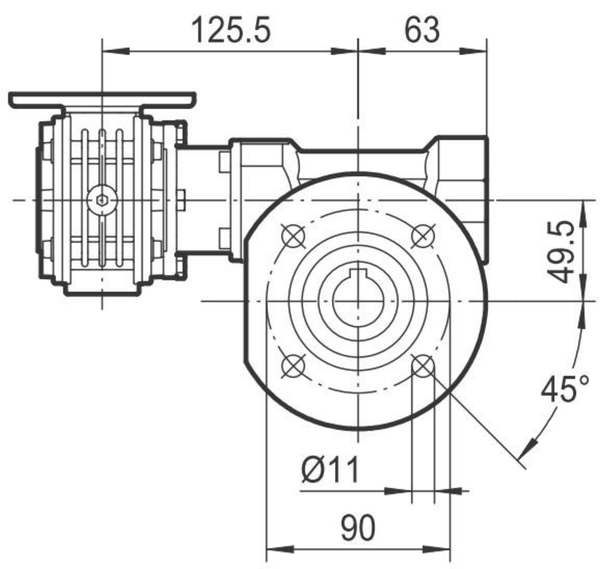

F1 **F2**

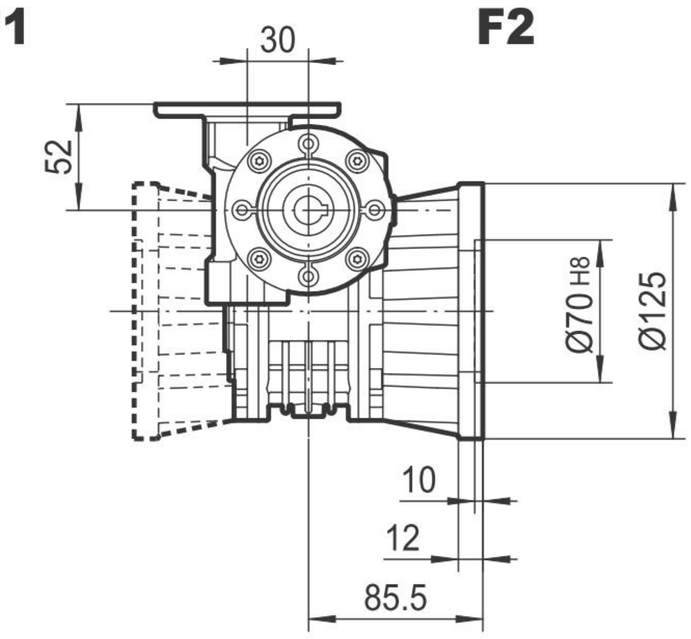

FA_

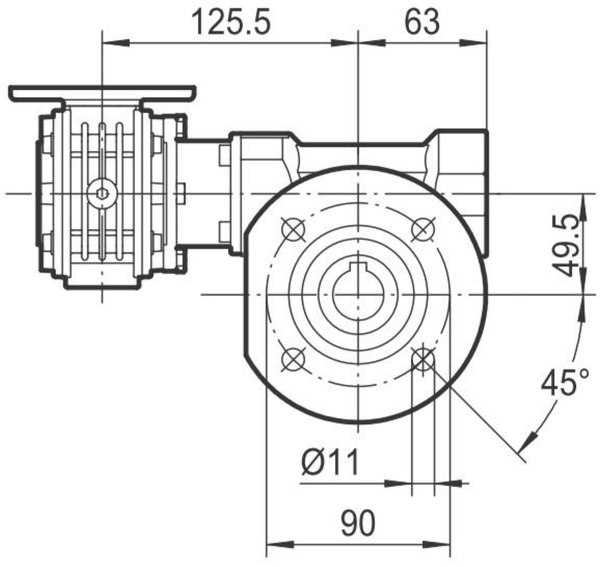

FA1 **FA2**

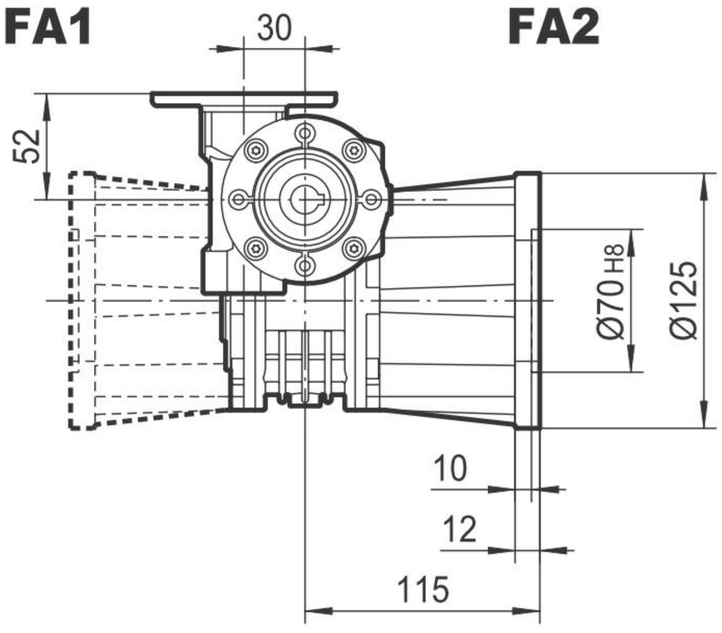

12.4.3 ***MRDB.. HS..*** Dimensioni / ***Outline dimension***

MRDB..HS..

MRDB_A..HS.

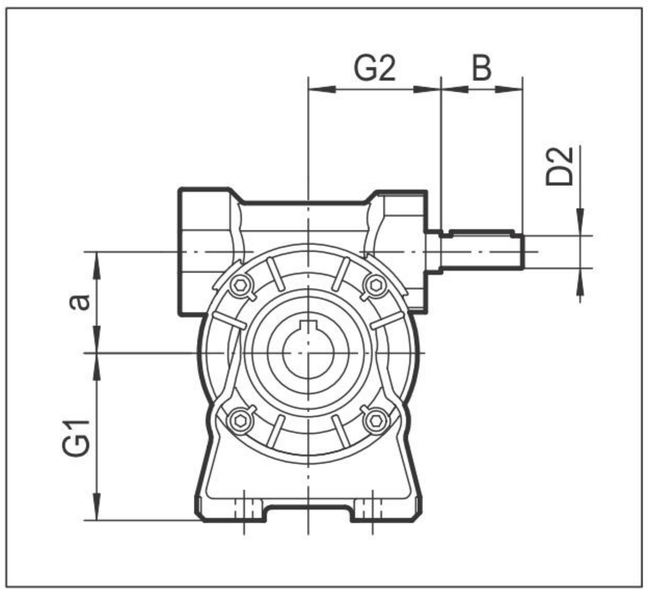

MRDB_V..HS.

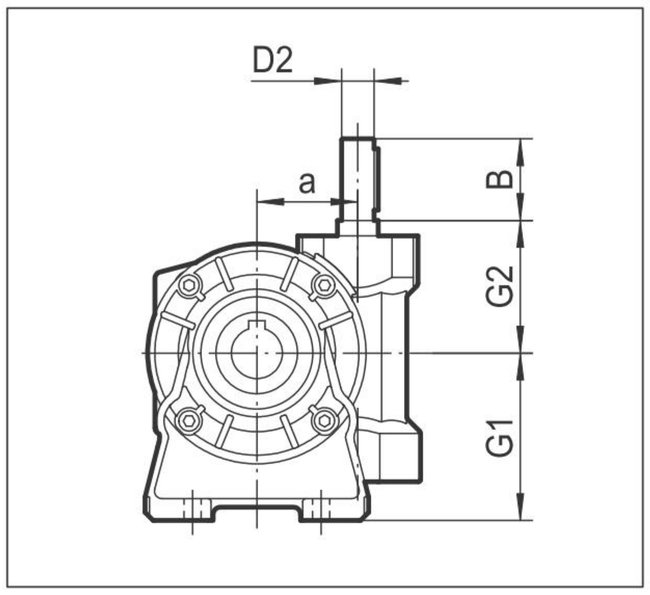

MRDB_N..HS.

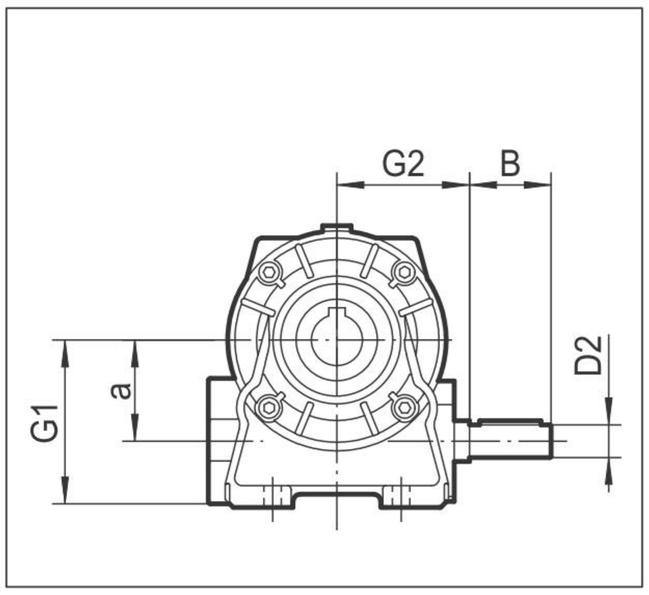

MRDB_P..HS.

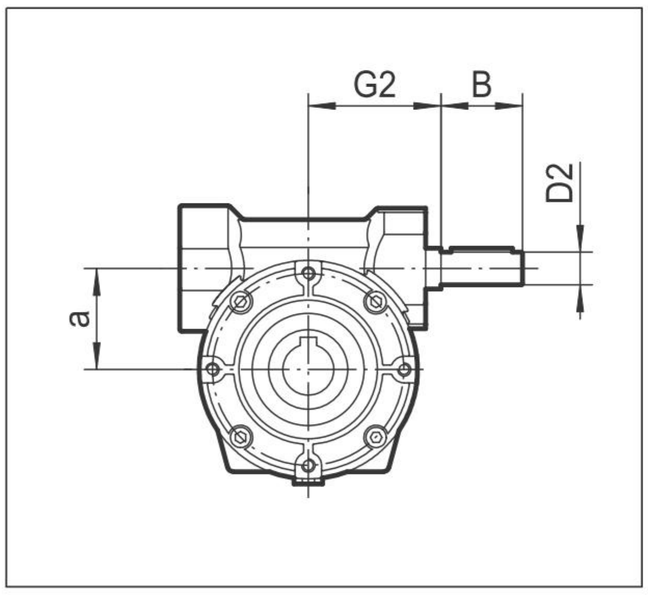

MRDB_F..H S.
MRDB_FA..HS.

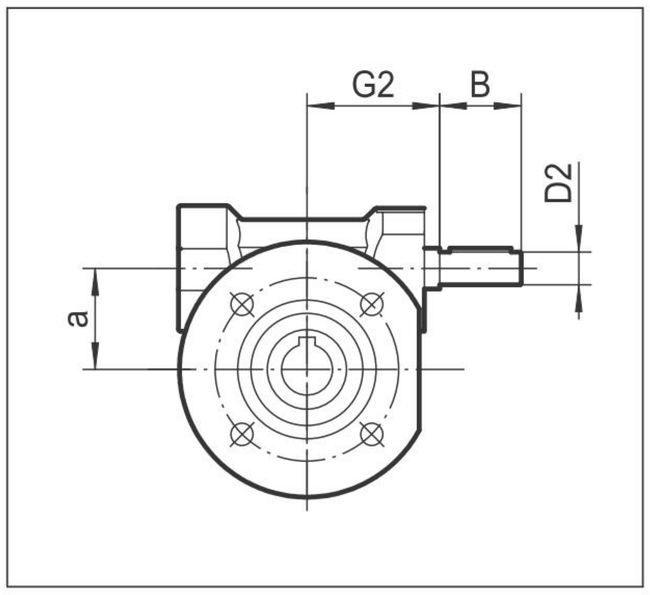

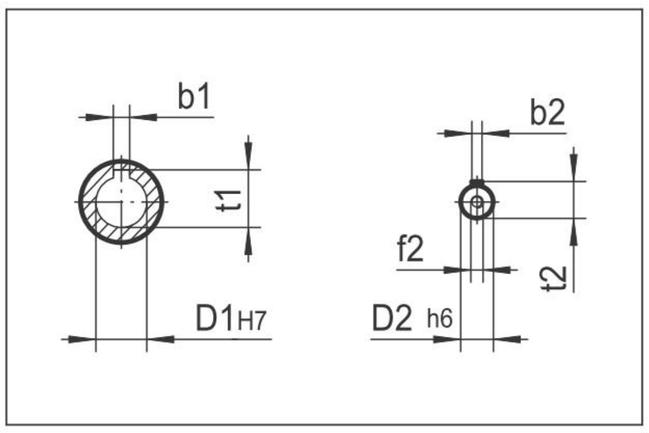

	a	D1 H7	t1	b1	D2 h6	t2	b2	B	G2	G1	f2
MRDB 30__HS	30	14	16.3	5	9	10.2	3	20	50	47	—
MRDB 44__HS	44.6	18	20.8	6	11	12.5	4	30	54	55	—
MRDB 49__HS	49.5	25	28.3	8	16	18	5	40	65	64.5	M6x16

12.4.4 MRDB/MRDB.. HS.. Dimensioni / *Outline dimension*

MRDB/MRDB ..HS..

MRDB/MRDB_A..HS.

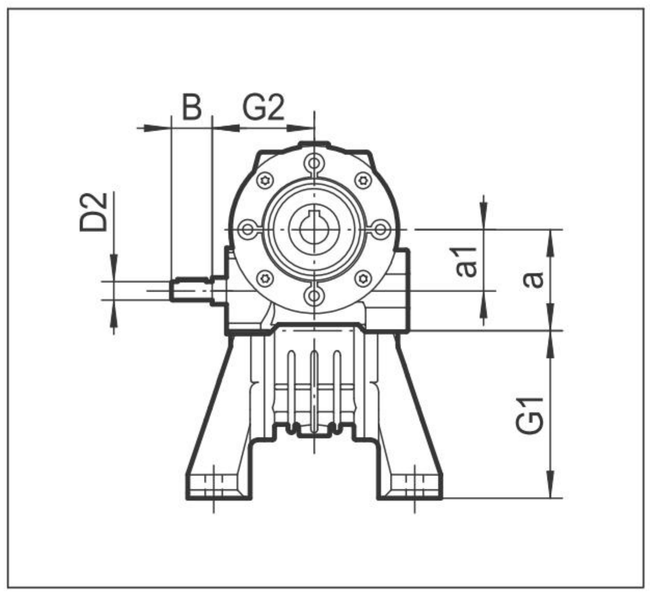

MRDB/MRDB_P..HS.

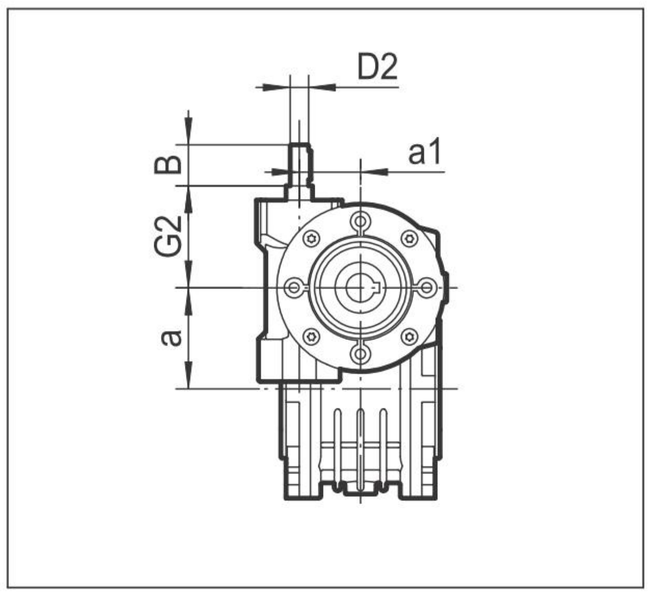

MRDB/MRDB_F..HS.

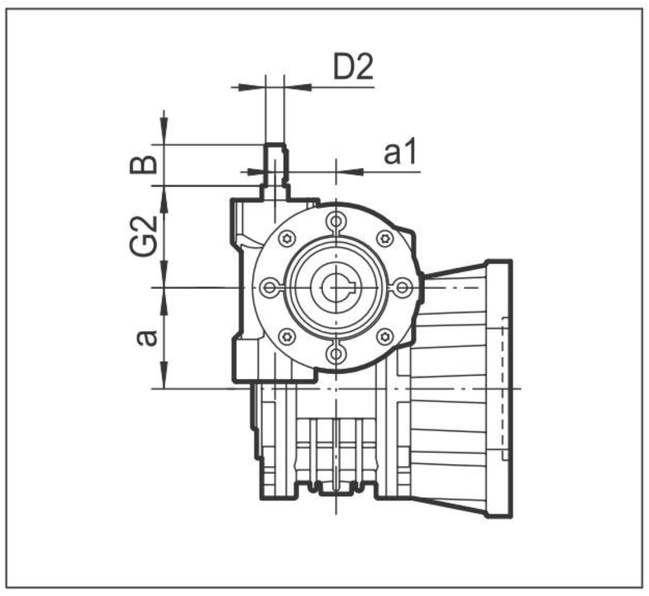

	a	a1	D1 H7	t1	b1	D2 h6
MRDB/MRDB 30/44__HS	44.6	30	18	20.8	6	9
MRDB/MRDV 30/49__HS	49.5	30	25	28.3	8	9
	t2	**b2**	**B**	**G2**	**G1**	**f2**
MRDB/MRDB 30/44__HS	10.2	3	20	50	72	—
MRDB/MRDB 30/49__HS	10.2	3	20	50	82	—

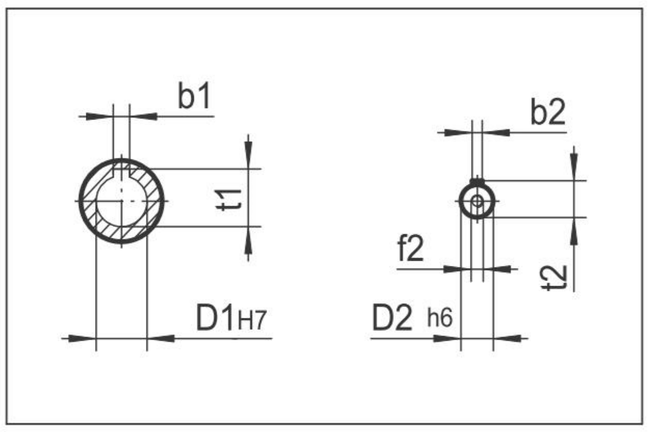

12.4.5 MRDB/MRDB.. E(EO).. Dimensioni / *Outline dimension*

I ridurttori possono essere forniti su ordinazione con albero doppio in uscita

Worm gears can be optionally requested with extended wormshaft at NDE by specifying the option E or EO (for double worm combined units) at the time of order.

P(IEC)

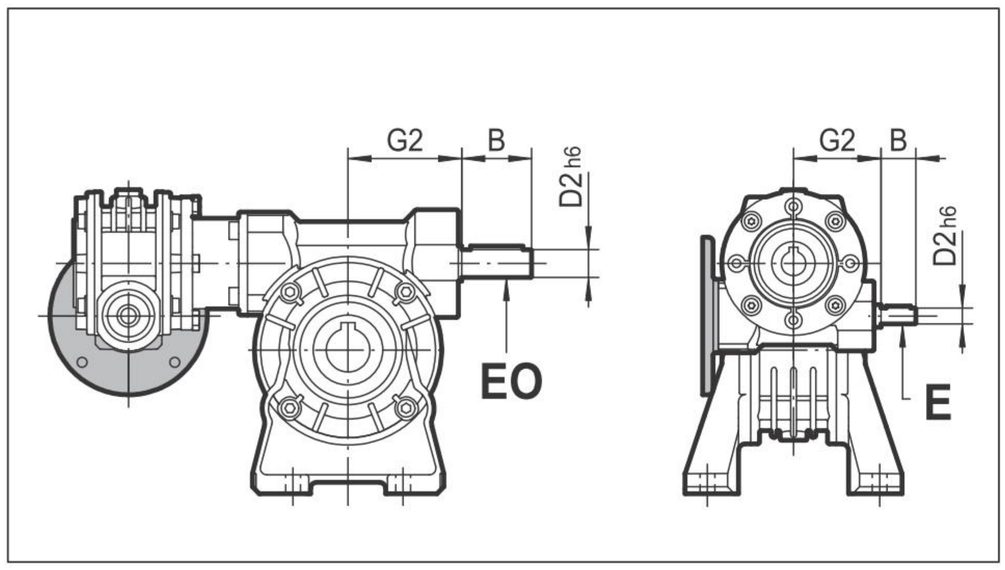

HS

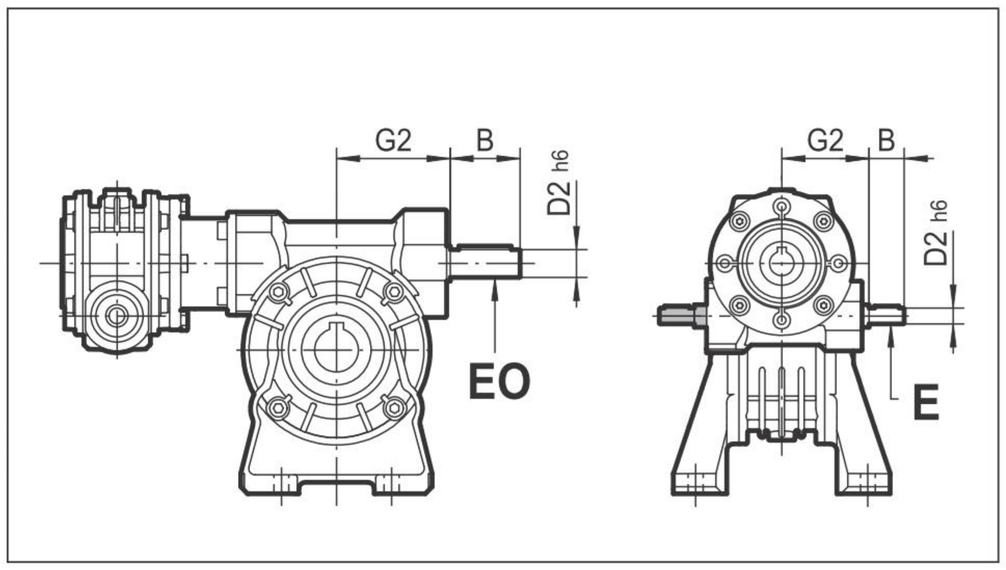
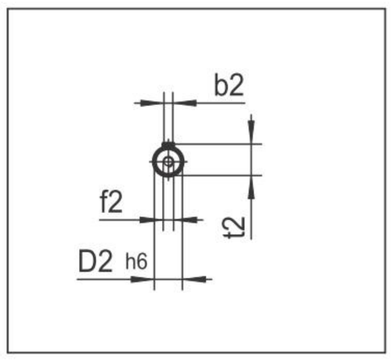
	D2 h6	t2	b2	B	G2	f2
MRDB 30	9	10.2	3	20	50	-
MRDB 44	11	12.5	4	30	56	-
MRDB 49	16	18	5	40	65	M6