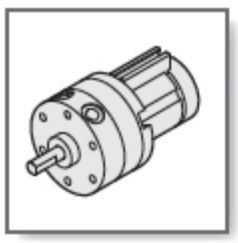

RTM series - ROTARY CYLINDER

Operating specification and Ordering expression

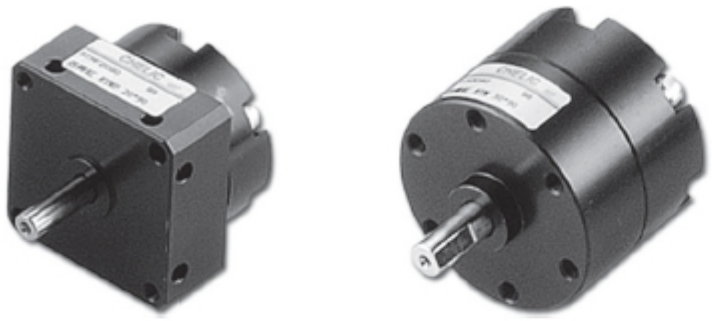

Internal structure

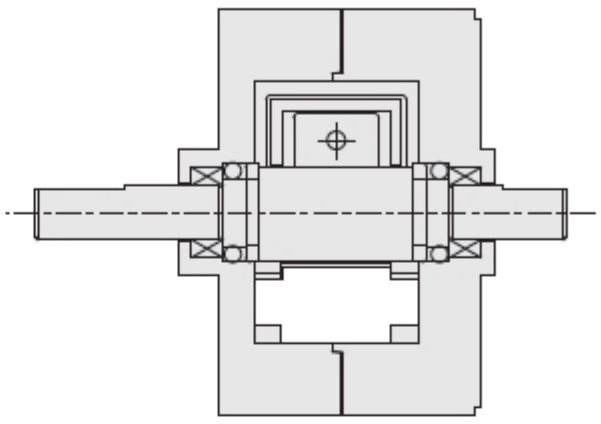

Specification

New

Item \ Model (mm)	RTM10 - ☐	RTM15 - ☐	RTM20 - ☐	RTM30 - ☐	RTM40 - ☐
Operation	Double acting				
Fluid	Air				
Torque N·m	0.14	0.38	0.78	1.8	3.8
Bore Size	Ø 4	Ø 5	Ø 6	Ø 8	Ø 10
Rotation angle	90° 180° 270°				
Port size	M5 x 0.8P				
Pressure range kgf/cm²(kpa)	1.5 ~ 7 (150 ~ 700)				
Temperature range °C	0 ~ 50				
Allowance of kinetic energy J	0.0015	0.001	0.003	0.02	0.04

Rotation angle

■ Rotation range 90° $^{+4°}_{0}$

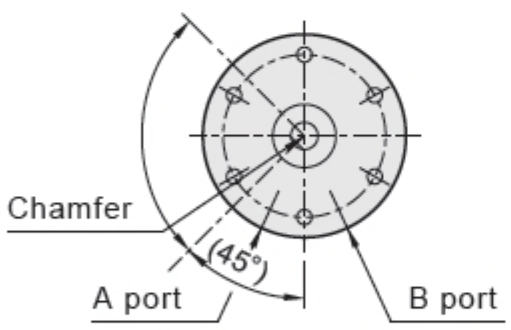

● 90°

■ Rotation range 180° $^{+4°}_{0}$

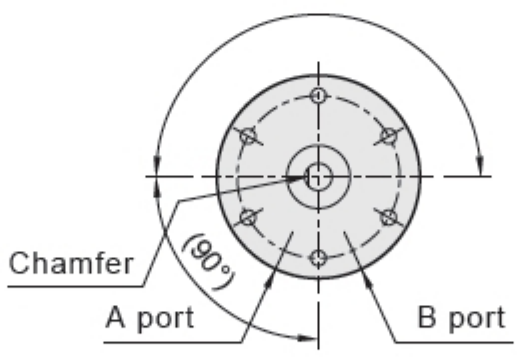

● 180°

■ Rotation range 270° $^{+4°}_{0}$

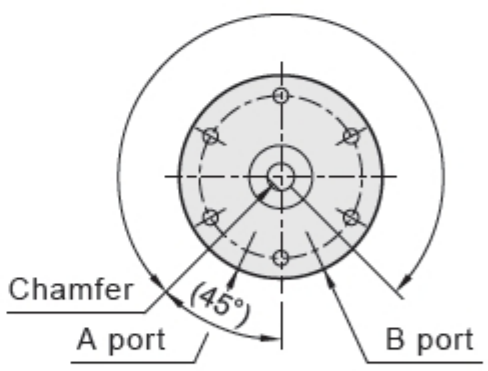

● 270°

How to order

RTM — Model

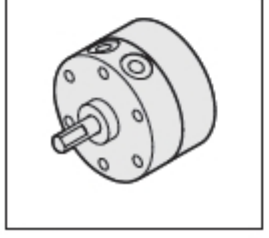

RTM series
Rotary Cylinder

F — Flange type

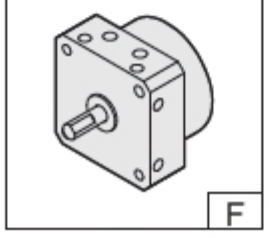

None : Standard
F : With front flange plate

10 — Torque

10 : 0.14 N·m
15 : 0.38 N·m
20 : 0.78 N·m
30 : 1.8 N·m
40 : 3.8 N·m

× 180 — Rotation angle

90 — 90°
180 — 180°
270 — 270°

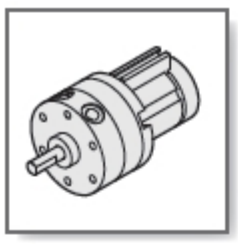

RTM series - ROTARY CYLINDER

Mounting type and Characteristics (Effective torque)

Mounting type

RTM

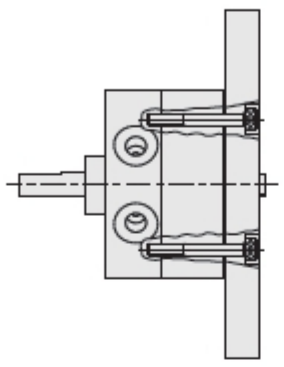

Bottom mounting type

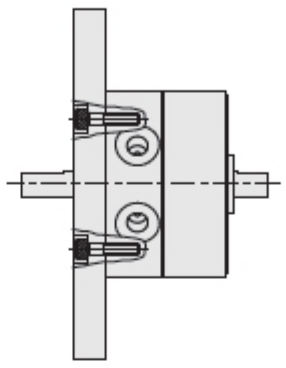

Front mounting type

RTM-F

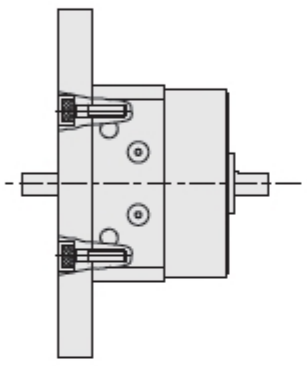

Front flange type

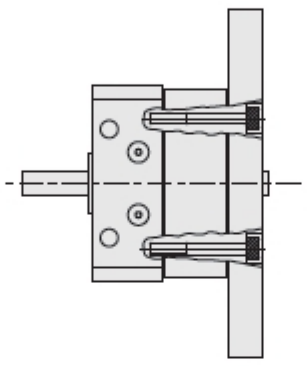

Bottom flange type

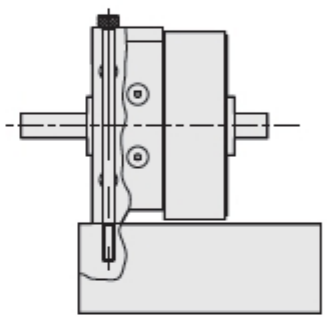

Top mounting type

Drawing of rotary torque

▼ RTM 10

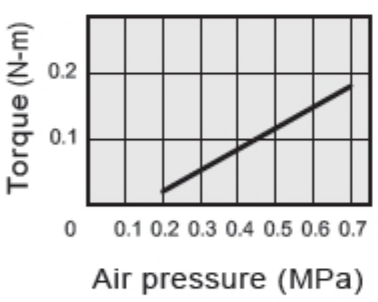

▼ RTM 15

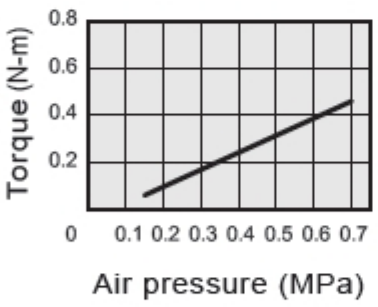

▼ RTM 20

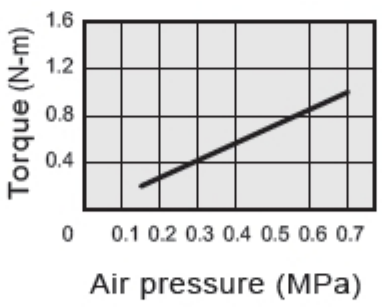

▼ RTM 30

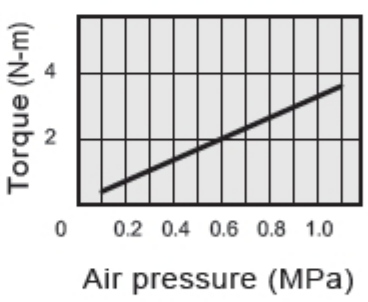

▼ RTM 40

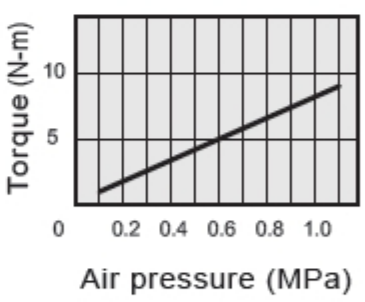

Internal structure

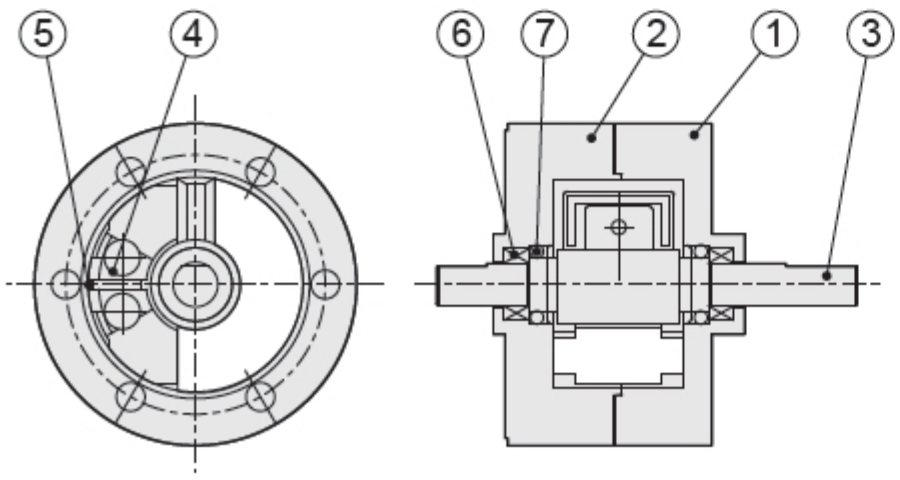

Component and Material list

NO	Item	Material
01	Front cover	Aluminum alloy
02	End cover	Aluminum alloy
03	Rod	Alloy Steel
04	Stopper	Plastic steel
05	O-Ring	NBR
06	Bearing	Bearing steel
07	O-Ring	NBR

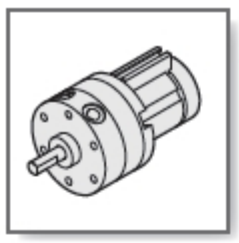

RTM series - ROTARY CYLINDER

New

External dimensions

RTM 10、15、20、30、40

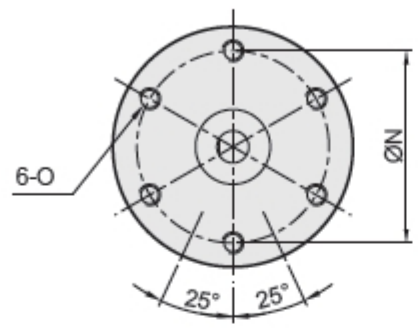

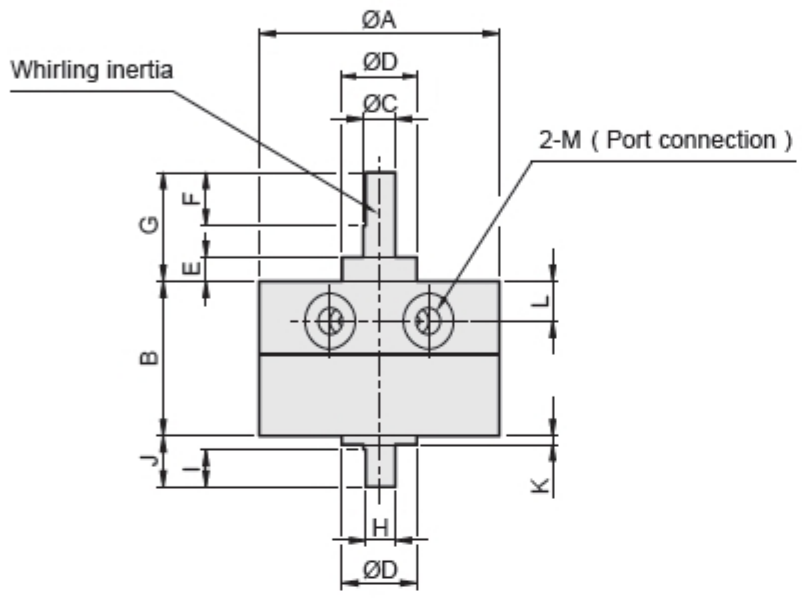

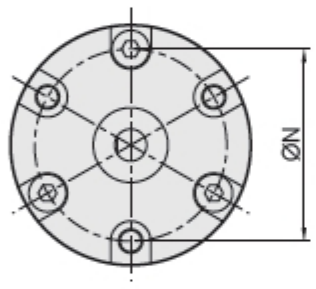

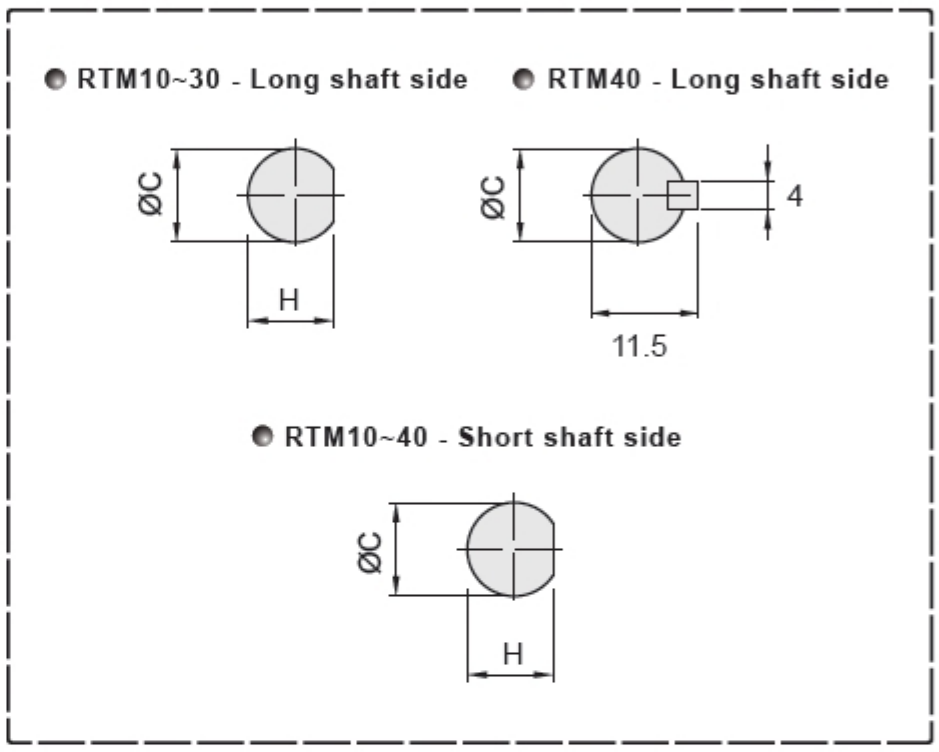

Dimension

Model	A	B	C	D	E	F	G	H	I	J	K	L	M	N	O
RTM10-90°															
RTM10-180°	30	17	4	9	3	9	14	3.5	5	8	1	4.2	M5x0.8p	24	M3x0.5p
RTM10-270°															
RTM15-90°															
RTM15-180°	35	20.1	5	12	4	10	18	4.5	6	9	1.5	5	M5x0.8p	29	M3x0.5p
RTM15-270°															
RTM20-90°															
RTM20-180°	44	29.1	6	14	4.5	10	20.3	5.5	7	9.6	1.6	8.5	M5x0.8p	36	M4x0.7p
RTM20-270°															
RTM30-90°															
RTM30-180°	51	40	8	16	5	12	22	7.5	8	13	2	11	M5x0.8p	43	M5x0.8p
RTM30-270°															
RTM40-90°															
RTM40-180°	64	45	10	25	6.5	22	30	9	9	15	4.5	9.5	M5x0.8p	56	M5x0.8p
RTM40-270°															

New

Weight

Model	RTM 10	RTM 15	RTM 20	RTM 30	RTM 40
Weight	28g	48g	112g	200g	342g

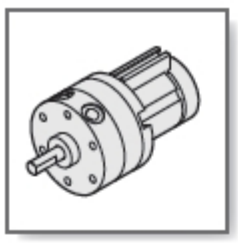

RTM - F series - ROTARY CYLINDER

New

External dimensions

RTM - F 10、15、20、30、40

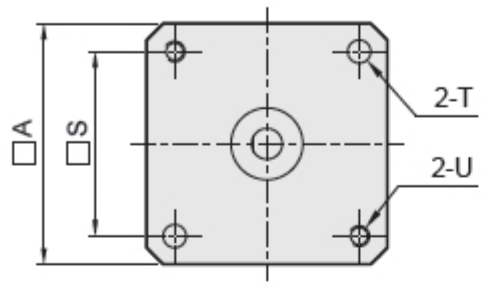

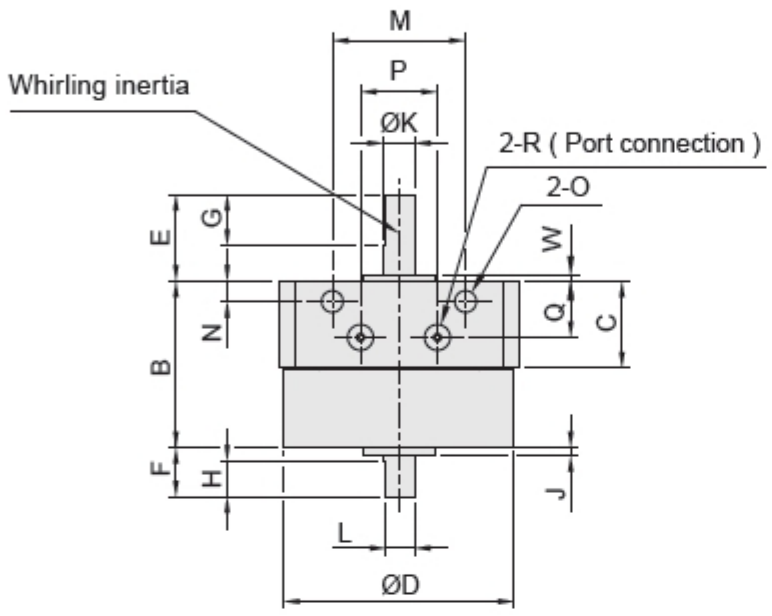

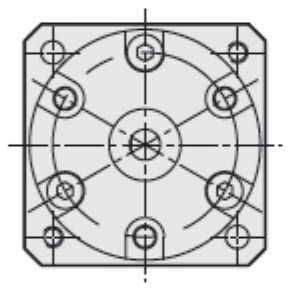

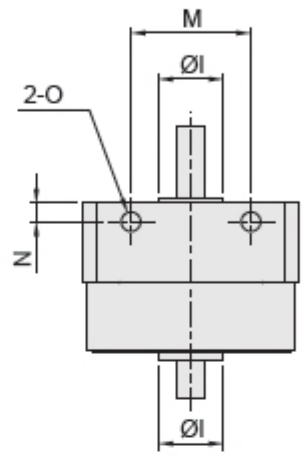

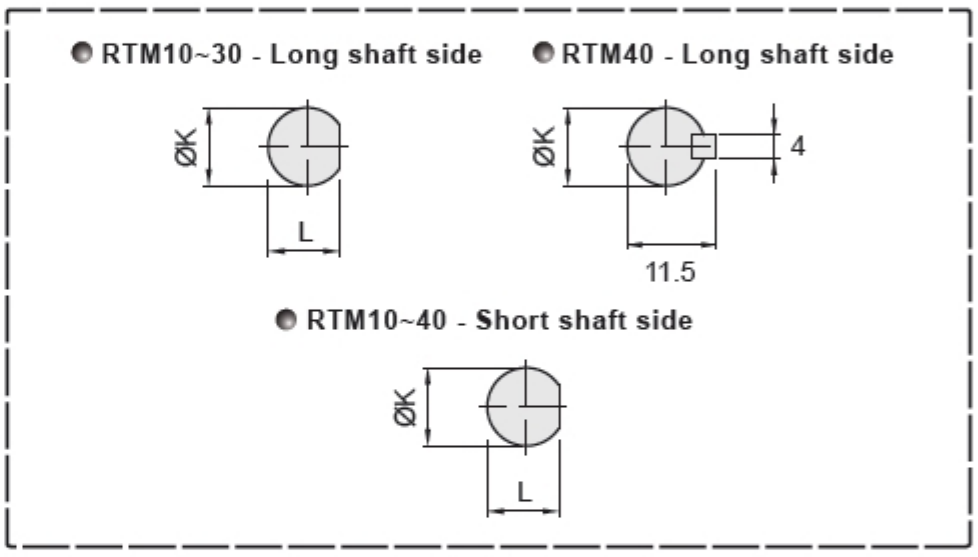

Dimension

Model	A	B	C	D	E	F	G	H	I	J	K	L	M	N	O	P	Q	R	S	T	U	V	W
RTM10-90°	31	22	13.3	30	14	8	9	5	9	1	4	3.5	17	3	3.5	10.5	9.2	M5x0.8p	25	3.5	M3x0.5p	24	1
RTM10-180°																							
RTM10-270°																							
RTM15-90°	36	25.7	15.5	35	18	9	10	6	12	1.5	5	4.5	21	3	3.5	10.5	10.5	M5x0.8p	29	3.5	M3x0.5p	29	1.5
RTM15-180°																							
RTM15-270°																							
RTM20-90°	44	33.6	19	44	20	9.6	10	7	14	1.6	6	5.5	26	4	4.2	15	13	M5x0.8p	36	4.5	M4x0.7p	36	1
RTM20-180°																							
RTM20-270°																							
RTM30-90°	52	47.5	27.2	51	22	13	12	8	16	2	8	7.5	29	4.5	5.5	13.5	18.5	M5x0.8p	42	5.5	M5x0.8p	43	2
RTM30-180°																							
RTM30-270°																							
RTM40-90°	64	53	30.4	64	30	15	22	9	25	4.5	10	9	38	5	5.5	19	14	M5x0.8p	52	5.5	M5x0.8p	56	3
RTM40-180°																							
RTM40-270°																							

New

Weight

Model	RTM10-F	RTM15-F	RTM20-F	RTM30-F	RTM40-F
Weight	41g	70g	138g	268g	438g

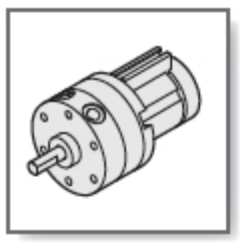

RTM series - ROTARY CYLINDER

(Angle adjustable and Sensing device)

Operating specification and Ordering expression

Internal structure

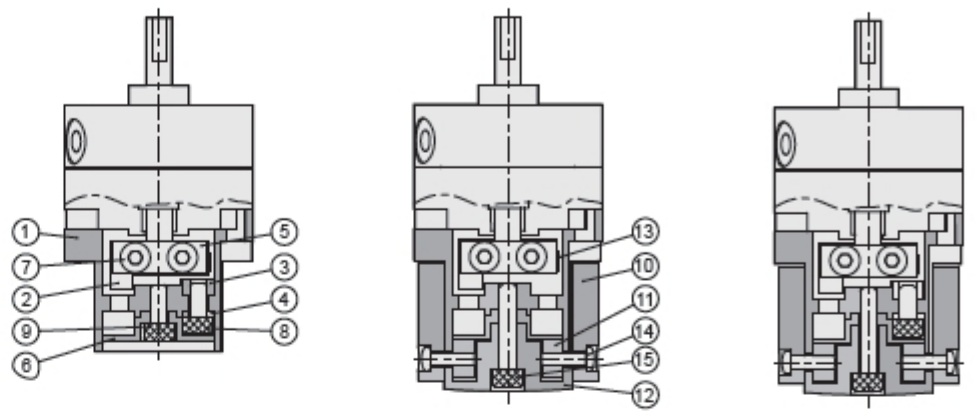

Component and Material list

No.	Item	Material	No.	Item	Material
01	Position base	Zinc alloy	09	Hexagonal screw	Alloy steel
02	Position lump	Stainless steel	10	Mounting base	Aluminum alloy
03	Angle location lump	Iron	11	Base and lump	Aluminum alloy
04	Angle location slice	Iron	12	End cover	Aluminum alloy
05	Lump and slice	Stainless steel	13	Magnet	TME
06	End cover	Aluminum	14	Circle cross screw	Alloy steel
07	Hexagon screw	Alloy steel	15	Hexagonal screw	Alloy steel
08	Hexagon screw	Alloy steel			

Rotation angle

■ Rotation range 90° $^{+4°}_{0}$

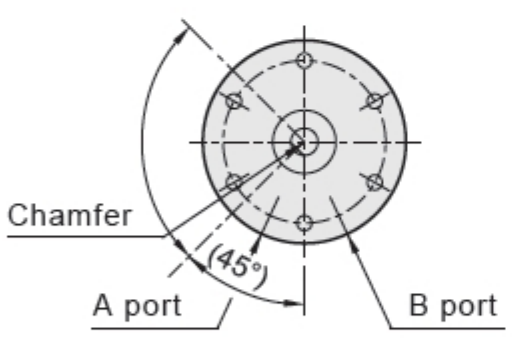

● 90°

■ Rotation range 180° $^{+4°}_{0}$

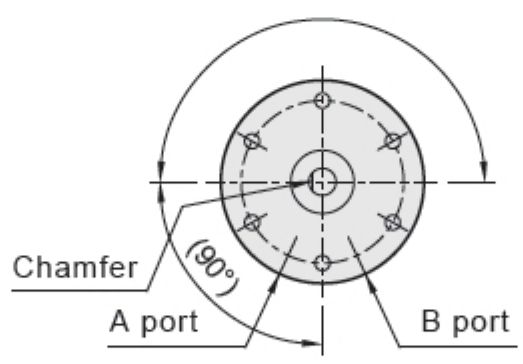

● 180°

■ Rotation range 270° $^{+4°}_{0}$

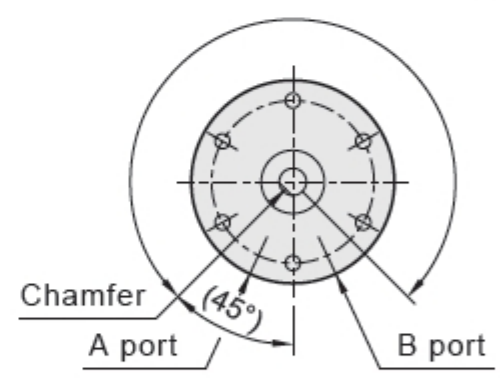

● 270°

How to order

RTM - F - 10 × 180 - L - C 1 - SG 1

Model	Flange type	Torque	Rotation angle	Adjustable angle	Sensor switch Holder	Sensor switch

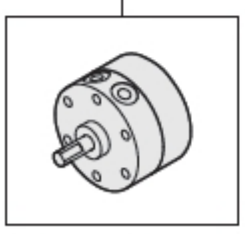

RTM series
Rotary cylinder

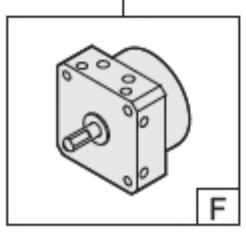

None : Standard
F : With front flange plate

10 : 0.14 N·m
15 : 0.38 N·m
20 : 0.81 N·m
30 : 1.8 N·m

90 - 90°
180 - 180°
270 - 270°

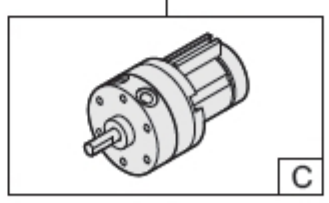

None : Standard
C : Sensor holder
2 : Number of sensor Holder
1 = 1 PCS sensor holder
2 = 2 PCS sensor holder

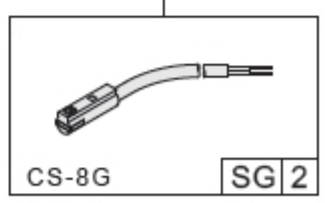

SG : Sensor code (CS-8G)
SGN : Sensor code (CS-8GN)
SGP : Sensor code (CS-8GP)
2 : Sensor number
1 = 1 PCS sensor
2 = 2 PCS sensor

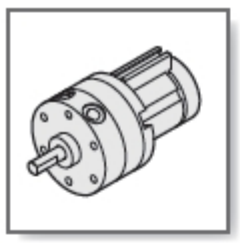

RTM series - ROTARY CYLINDER

(Angle adjustable and Sensing device)

External dimensions

RTM 10、15、20、30 – L

- Adjust angle implement

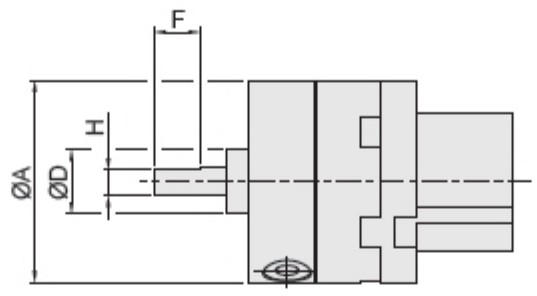

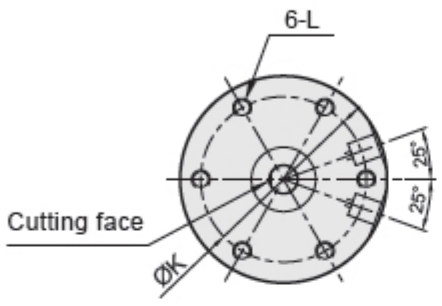

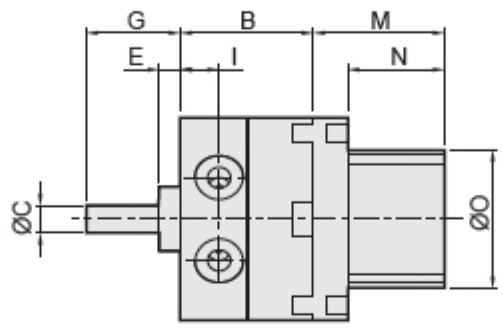

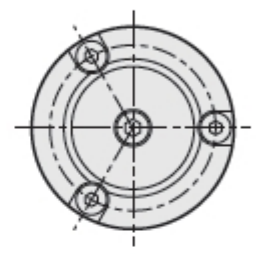

RTM 10、15、20、30 – C

- Sensor switch holder

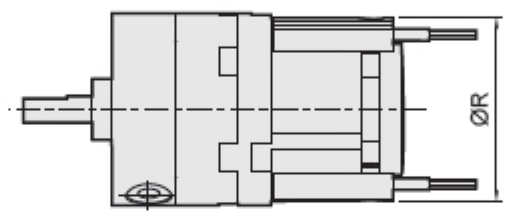

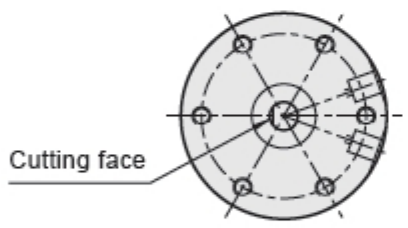

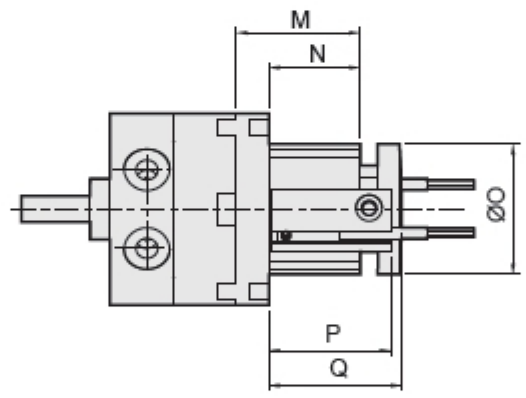

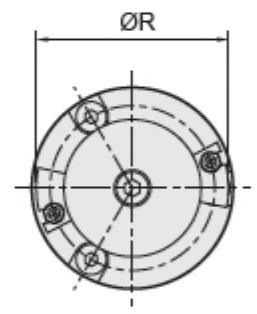

Dimension

Model	A	B	C	D	E	F	G	H	I	J	K	L	M	N	O	P	Q	R
RTM10-90°	30	17	4	9	3	9	14	3.5	4.2	M5x0.8p	24	M3x0.5p	24	18	18	23.3	24	29
RTM10-180°																		
RTM10-270°																		
RTM15-90°	35	20.1	5	12	4	10	18	4.5	5	M5x0.8p	29	M3x0.5p	28	22	24	27.3	29.5	34
RTM15-180°																		
RTM15-270°																		
RTM20-90°	44	29.1	6	14	4.5	10	20.3	5.5	8.5	M5x0.8p	36	M4x0.7p	28.5	21	30	28	30.5	42
RTM20-180°																		
RTM20-270°																		
RTM30-90°	51	40	8	16	5	12	22	7.5	11	M5x0.8p	43	M5x0.8p	32.5	24	34	30.8	34	47
RTM30-180°																		
RTM30-270°																		

Weight

Model	RTM 10	RTM 15	RTM 20	RTM 30
Weight	78g	116g	240g	390g

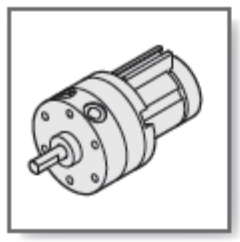

RTM series - ROTARY CYLINDER

(Angle adjustable and Sensing device)

External dimensions

RTM-F 10、15、20、30 – L

- Adjust angle implement

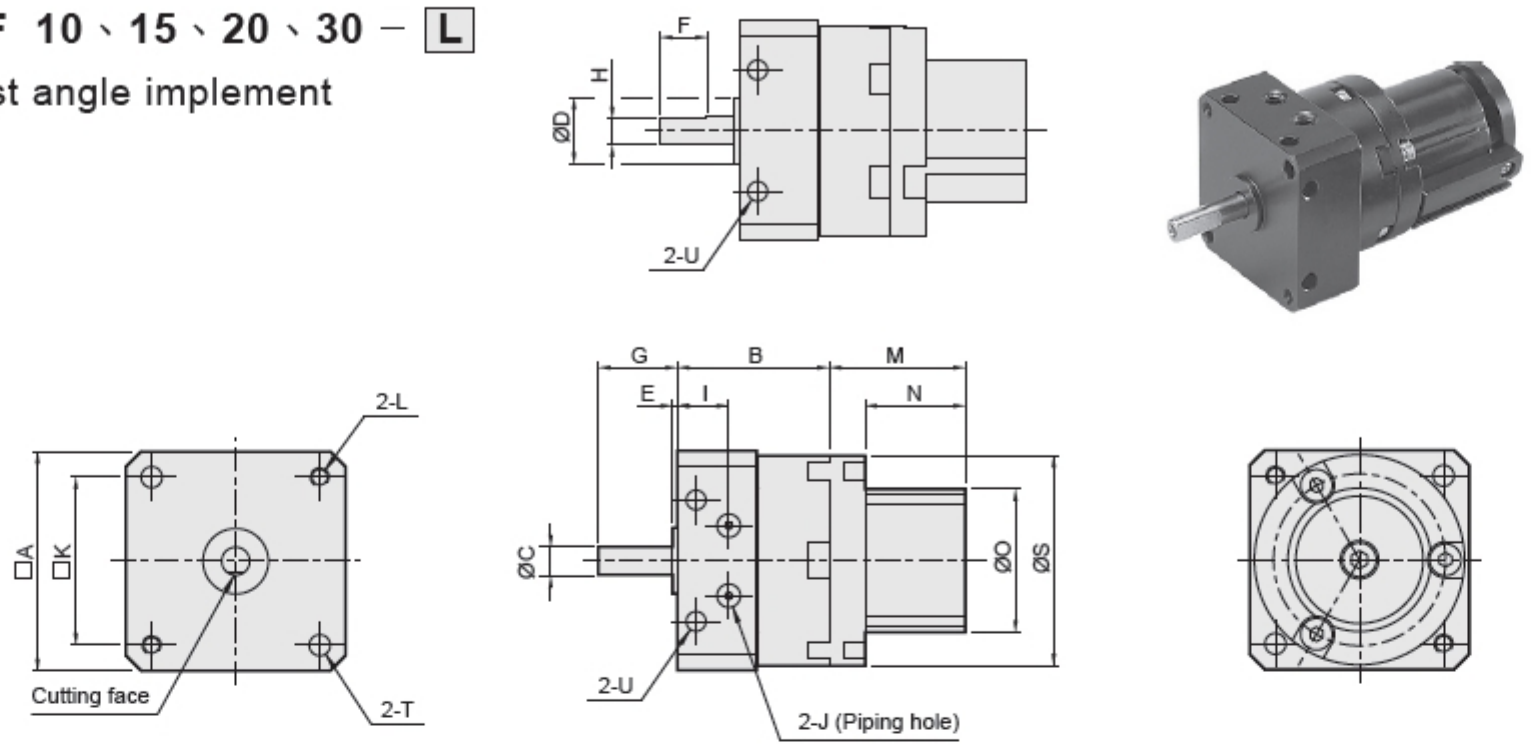

RTM-F 10、15、20、30 – C

- Sensor switch holder

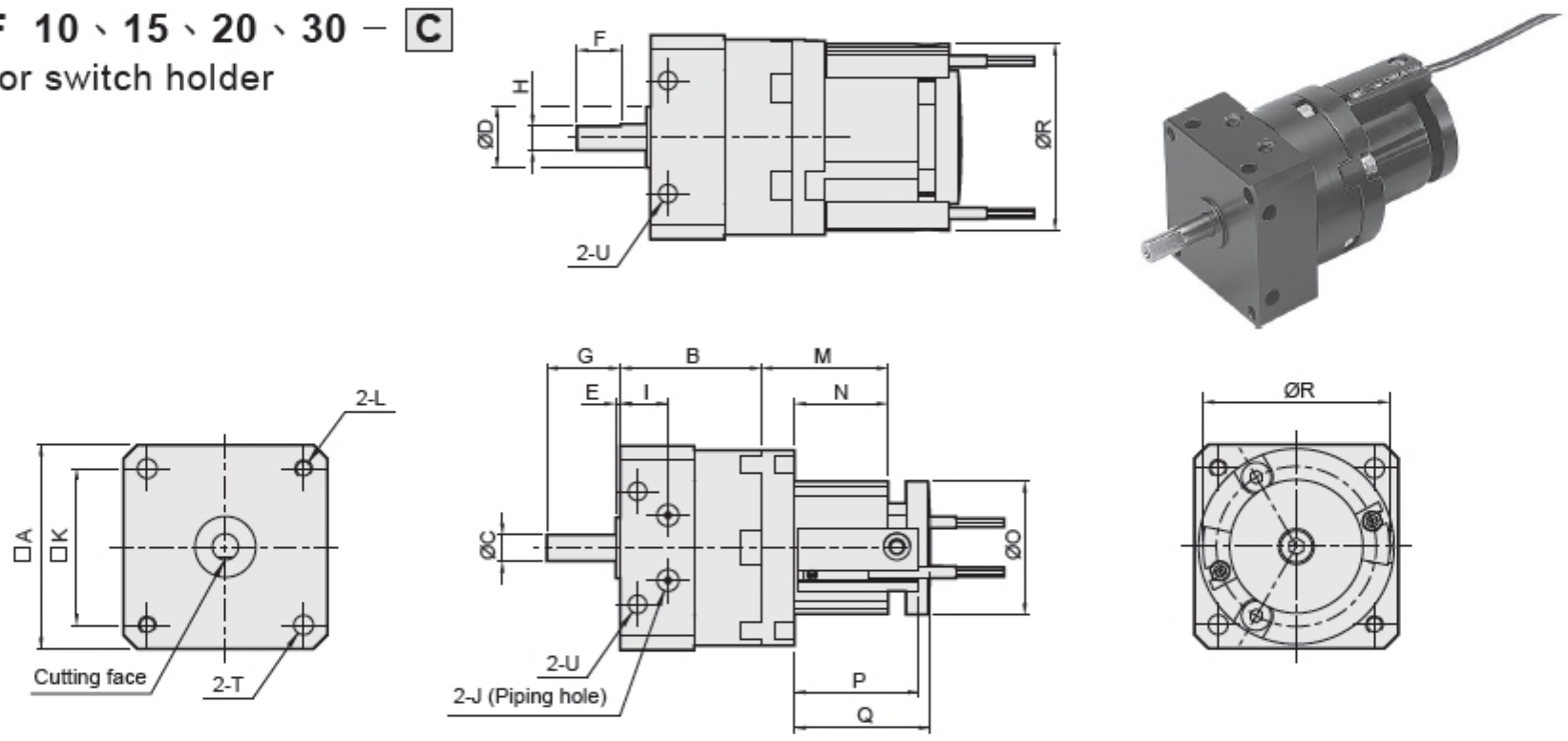

Dimension

Model	A	B	C	D	E	F	G	H	I	J	K	L	M	N	O	P	Q	R	S	T	U
RTM10-90°																					
RTM10-180°	31	22	4	9	1	9	14	3.5	9.2	M5x0.8p	25	M3x0.5p	24	18	18	23.3	24	29	30	3.5	3.5
RTM10-270°																					
RTM15-90°																					
RTM15-180°	36	25.7	5	12	1.5	10	18	4.5	10.5	M5x0.8p	29	M3x0.5p	28	22	24	27.3	29.5	34	35	3.5	3.5
RTM15-270°																					
RTM20-90°																					
RTM20-180°	44	33.6	6	14	1	10	20	5.5	13	M5x0.8p	36	M4x0.7p	28.5	21	30	28	30.5	42	44	4.5	4.2
RTM20-270°																					
RTM30-90°																					
RTM30-180°	52	47.5	8	16	2	12	22	7.5	18.5	M5x0.8p	42	M5x0.8p	32.5	24	34	30.8	34	47	51	5.5	5.5
RTM30-270°																					

Weight

Model	RTM10-F	RTM15-F	RTM20-F	RTM30-F
Weight	91g	138g	266g	468g

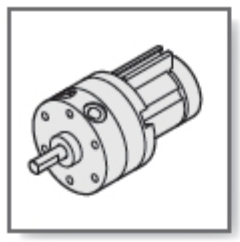

RTM series - ROTARY CYLINDER

Description of angel adjustment

Adjustment method of rotation angel

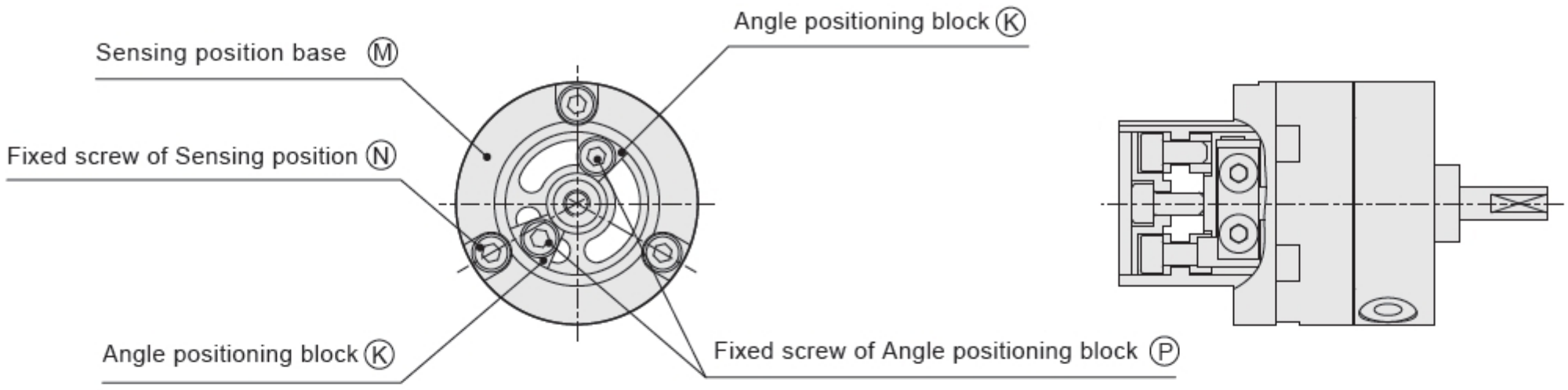

■ Method of adjustment :

- **1.** Take out the Fixed screw of Sensing position Ⓝ , Adjust the "sense positioning base Ⓜ " to desire setting position (A,B,C) and then tighten to secure.
- **2.** Loosen Fixed screw of Angle positioning block Ⓟ "to allow the" Angle positioning block Ⓚ "sliding on the slot (Please never loosen completely).
- **3.** Slide the "Angle positioning block Ⓚ" to desire angle and then tighten fixed screw.
- **4.** Match the rotating shaft in order to achieve more accurate positioning.

Description of adjustment

There are three angle setting position (as showing figure - A,B,C below) for sensor positioning base of each model.The preset range of adjustment is between internal angle position block inside the cylinder. Since there is limitation of accuracy of the internal angle positioning blocks inside the cylinder, if 90°and 180° accuratepositioning is required, please adjust to 270°.

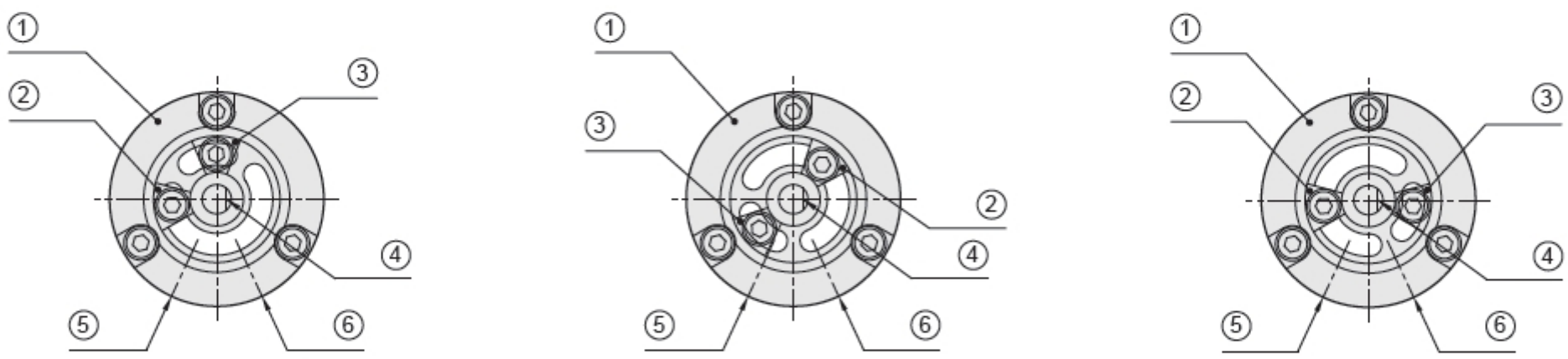

● Position- A ● Position- B ● Position- C

■ ① Sensor positioning base ② Angle positioning block-1 ③ Angle positioning block-2

④ Cutting face ⑤ A through hold ⑥ B through hold

- **While using one group of Angel positioning block and fixed to long slot side, the range of adjustable angle for each specification and listed as below :**

	Position - A			Position - B			Position - C		
	90°	180°	270°	90°	180°	180°	90°	180°	270°
RTM-10	0°~90°	130°~180°	175°~225°	30°~90°	0°~180°	0°~250°	0°~10°	105°~180°	105°~270°
RTM-15									
RTM-20									
RTM-30									

Note : 1. Home points are base on clockwise rotated shaft until contacting internal angle positioning blocks serving are 0°. The rotation range is the area while rotating and contact the angle position blocks again.

2. Specification of 90° is fixed by model A.

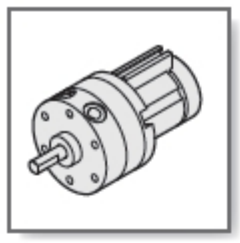

RTM series - ROTARY CYLINDER

Sensor switch position and Adjustment method

Adjustment method of sensor switch position

Method of adjustment :

1. Loosen the Fixed screw of the holder Ⓟ "to allow sliding both sides.
2. Insert the sensor switch Ⓢ into Holder Ⓜ to flush with bottom,and then tighten the fixed screw Ⓚ .
3. Adjust the Holder Ⓜ to desired angle,and then tighten the Fixed screw of the holder Ⓟ .

■ **Sensor fixing position**

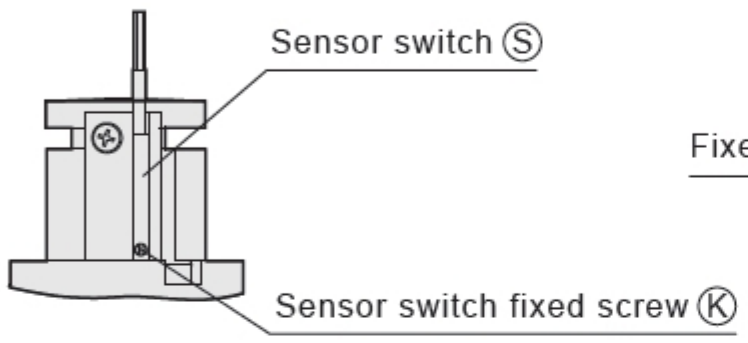

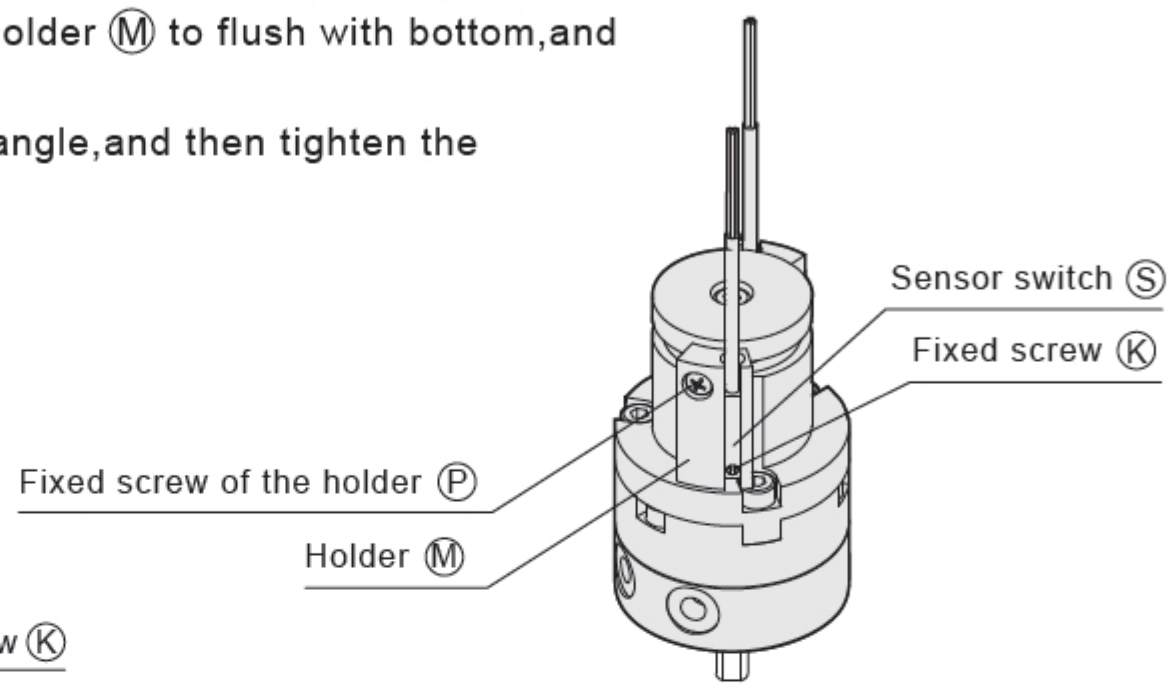

Sensor switch position and Adjustment method

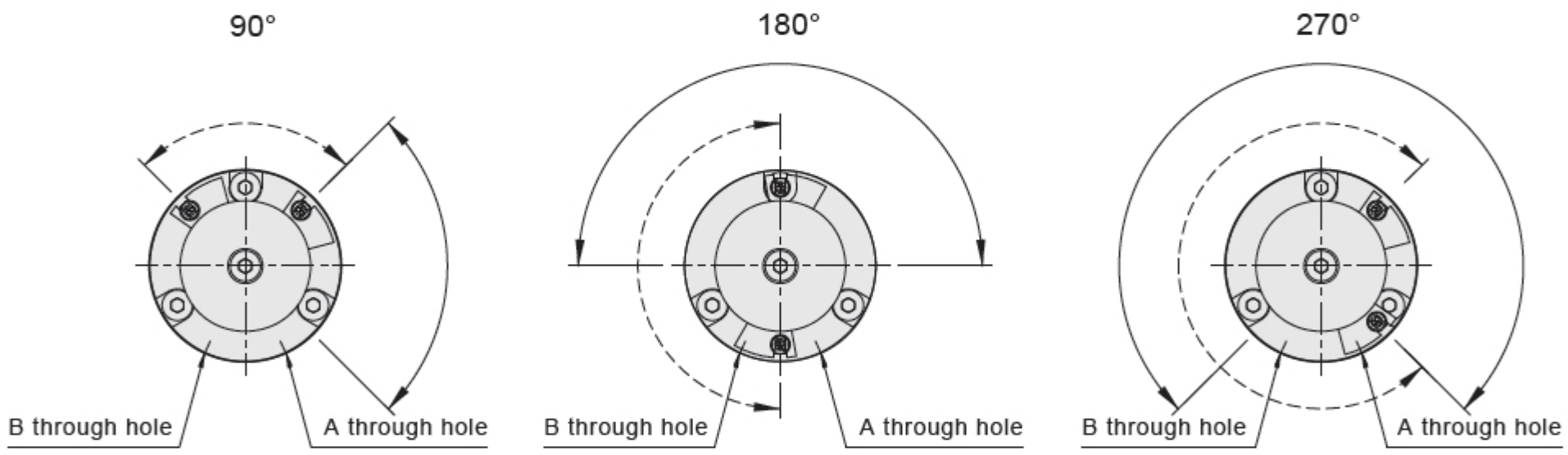

Description of adjustment :

1. As illustrated in above figure, the solid line area indicate rotation area of shaft cutting face, dotted line indicate rotation area of magnet.
2. The rotation area of magnet represents valid adjustment range of the sensor fixing holder. The sensor switch is effective within this range.

Sensor switch model

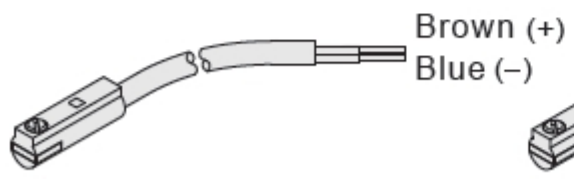

Voltage : DC 10V ~ 28V
AC 10V ~ 28V

CS-8G

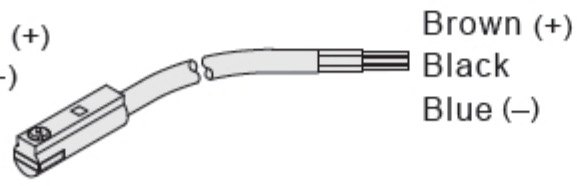

Voltage : DC 4.5V ~ 28V
AC 4.5V ~ 28V

CS-8GN(P)

CS-8G / CS-8GN(P)
(Please see P.22-1.13 sensor switch formulation.)

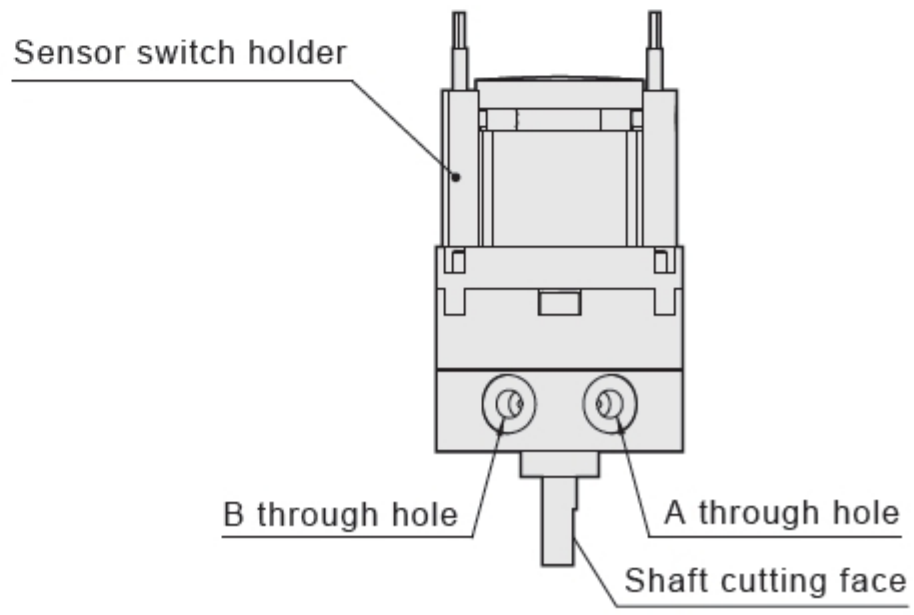

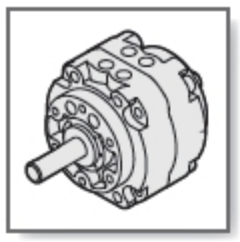

RTM series - ROTARY CYLINDER

Operating specification and Ordering expression

Internal structure

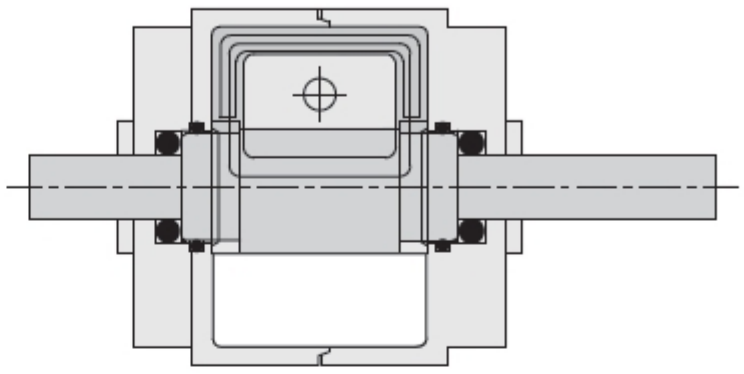

Specification

New New

Item / Model (mm)	RTM50 - ▭	RTM63 - ▭	RTM80 - ▭	RTM100 - ▭
Operation	Double acting			
Fluid	Air			
Torque N·m	5	10	18	35
Bore Size	Ø12	Ø15	Ø17	Ø25
Rotation angle	90、180、270°			
Port size	RC1/8		RC1/4	
Pressure range Kgf/cm²(Kpa)	1.5~7(150~700)			
Temperature range ℃	0~50			
Allowance of kinetic energy J	0.082	0.12	0.39	0.6

Rotation angle

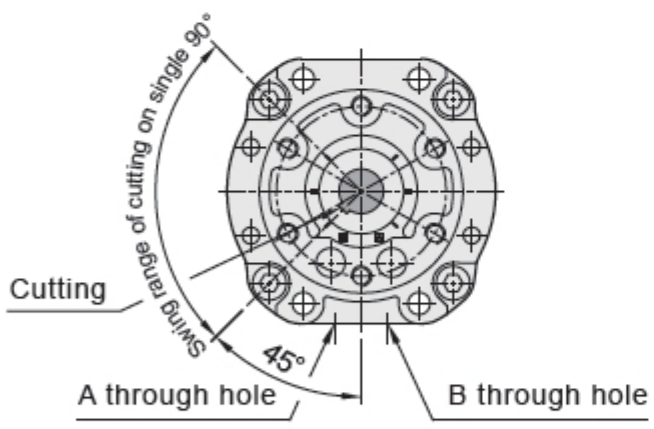

90°

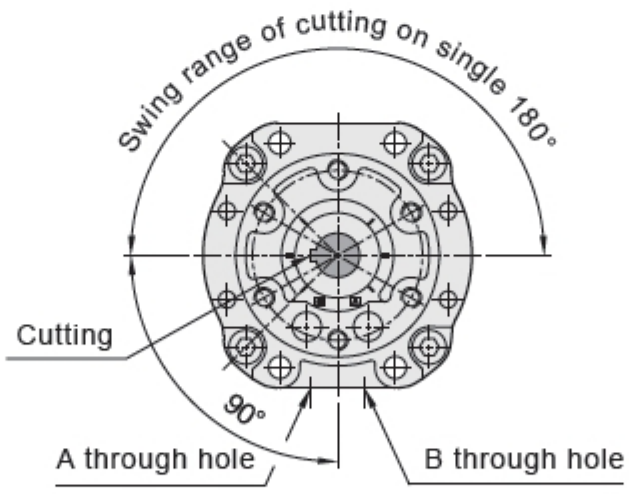

180°

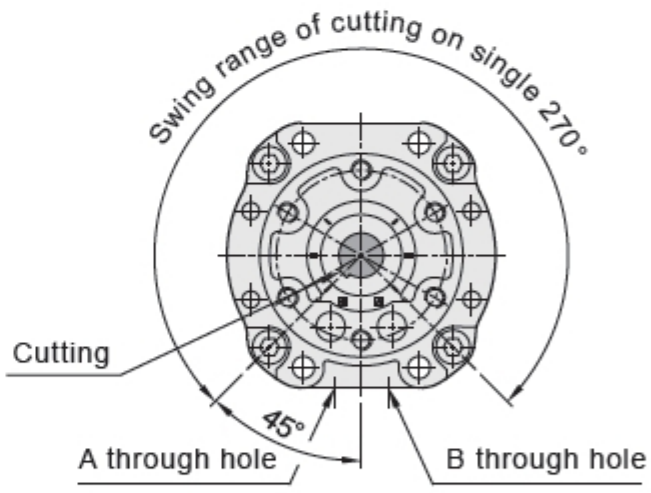

270°

How to order

RTM — 50 × 180

Model	Torque	Rotation Angle
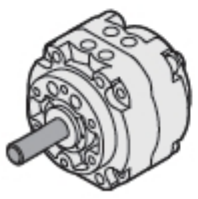	50 : 5 N·m 63 : 10 N·m 80 : 18 N·m 100 : 35 N·m	90 — 90° 180 — 180° 270 — 270°

RTM series
Rotary Cylinder

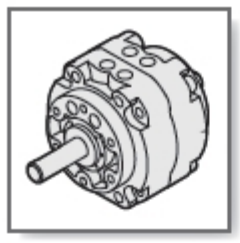

RTM series - ROTARY CYLINDER

Mounting type and Characteristics (effective torque)

Mounting type

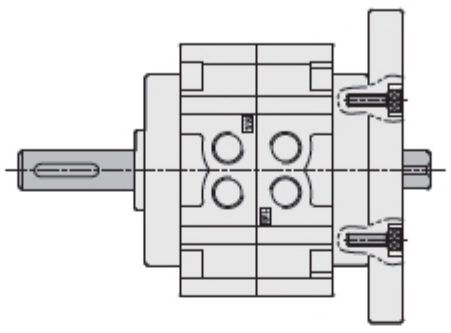

Bottom mounting type

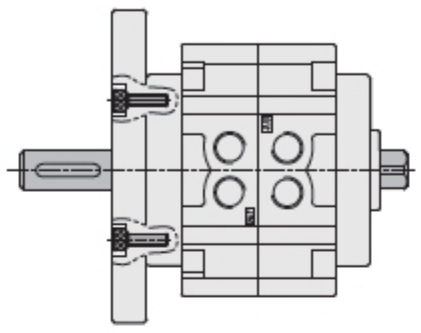

Front mounting type

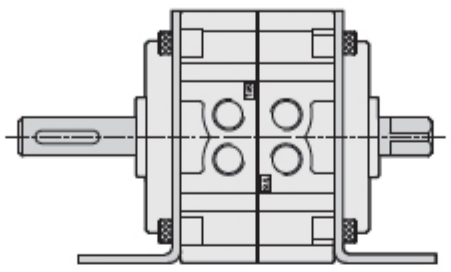

Top mounting type

Out put characteristics

RTM 50

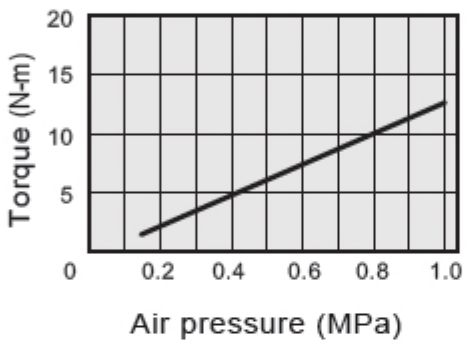

RTM 63

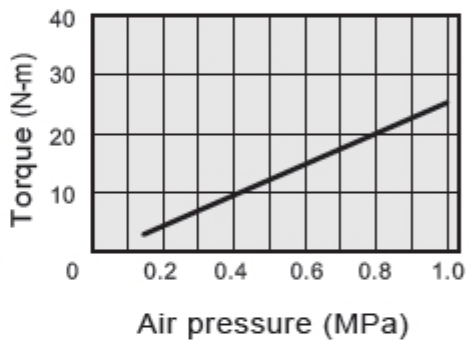

RTM 80

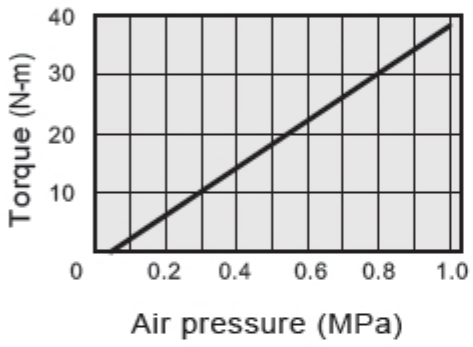

RTM 100

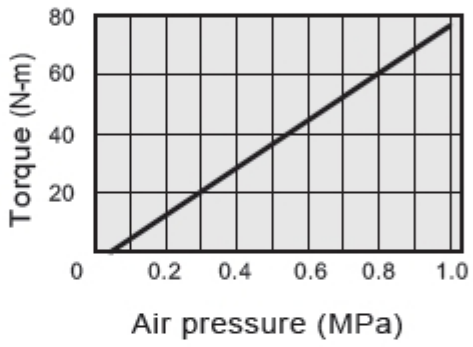

Internal structure

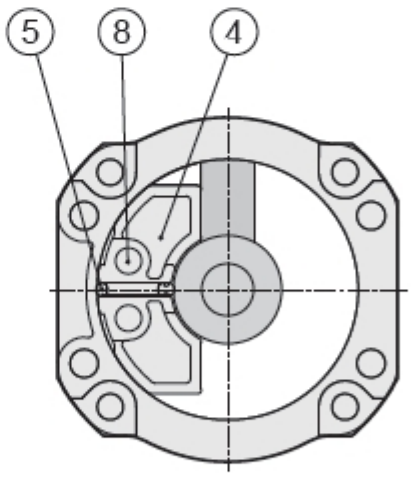

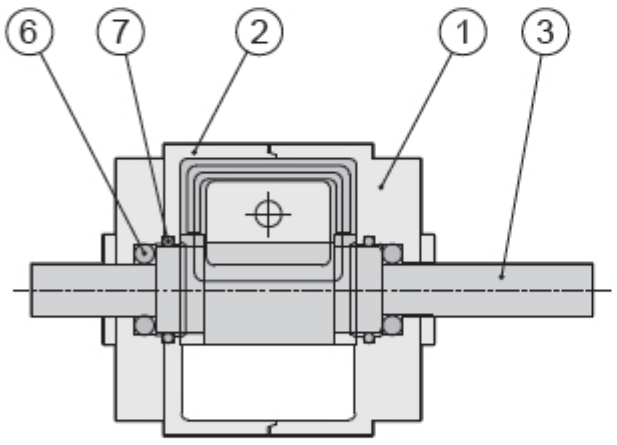

Material list

No.	Item	Material
01	Front body	Aluminum alloy
02	End body	Aluminum alloy
03	Rod	Alloy steel
04	Position block	Aluminum alloy
05	O-Ring	NBR
06	Bearing	Bearing steel
07	O-Ring	NBR
08	Position pin	Bearing steel

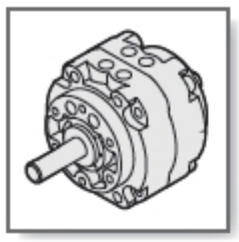

RTM series - ROTARY CYLINDER

External dimensions

RTM 50、63、80、100

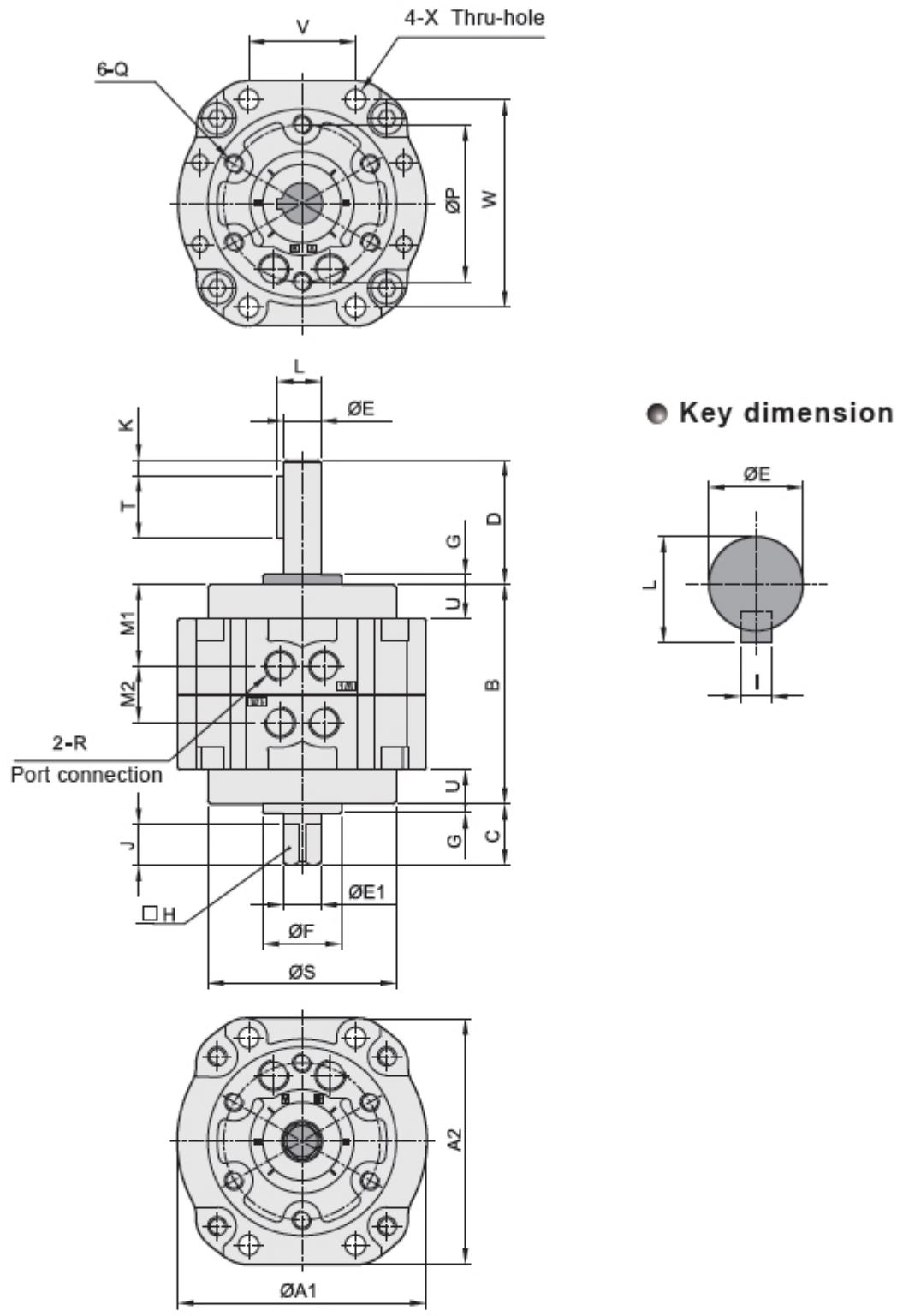

Dimension

Model	A1	A2	B	C	D	E	F	G	H	I	J	K	L	M1	M2	P	Q	R	S	T	U	V	W	ØX
RTM50-90°																								
RTM50-180°	79	78	70	19.5	39.5	12	25	3	10	4	13	5	13.5	26	18.2	50	M6X1.0P	RC1/8″	60	20	11	34	66	6.5
RTM50-270°																								
RTM63-90°																								
New RTM63-180°	98	98	80	21	45	15	28	3	12	5	14	5	17	28.9	22.2	60	M8X1.25P	RC1/8″	75	25	14	39	83	9
RTM63-270°																								
RTM80-90°																								
RTM80-180°	110	110	90	23.5	53.5	17	30	3	13	5	16	5	19	30	30.2	70	M8X1.25P	RC1/4″	88	41	15	48	94	9
RTM80-270°																								
RTM100-90°																								
New RTM100-180°	140	140	103	30	65	25	45	4	19	7	22	5	28	35.4	32.2	80	M10X1.5P	RC1/4″	108	40	11.5	60	120	11
RTM100-270°																								

Weight

Model	RTM 50	RTM 63	RTM 80	RTM 100
Weight	0.76 kg	1.29 kg	1.92 kg	3.56 kg

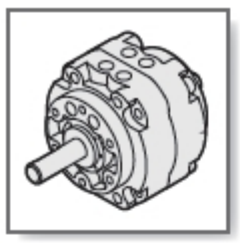

RTM series - ROTARY CYLINDER

Operating specification and Ordering expression

Internal structure

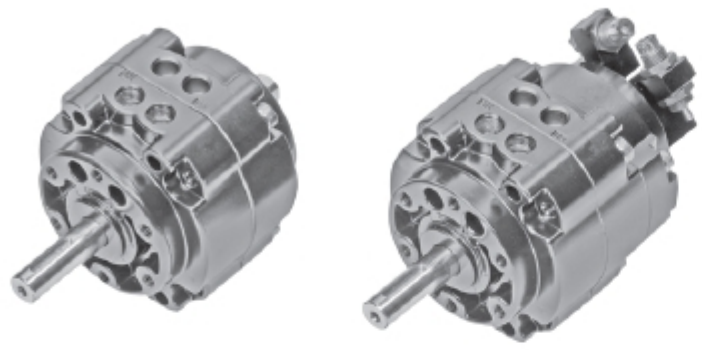

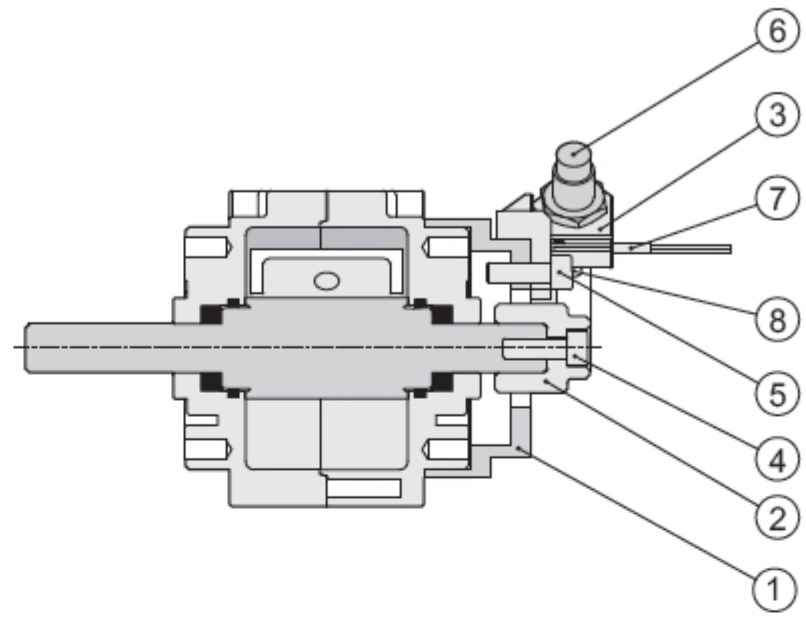

Components and Material list

No.	Item	Material	No.	Item	Material
01	Fixed base	Aluminum alloy	05	Fixed screw	Aluminum alloy
02	Rocker arm	Stainless steel	06	Shock absorber	—
03	Position block	Aluminum alloy	07	Sensor switch	—
04	Fixed screw	Alloy steel	08	Magnet	Rare earth metals

Rotation angle

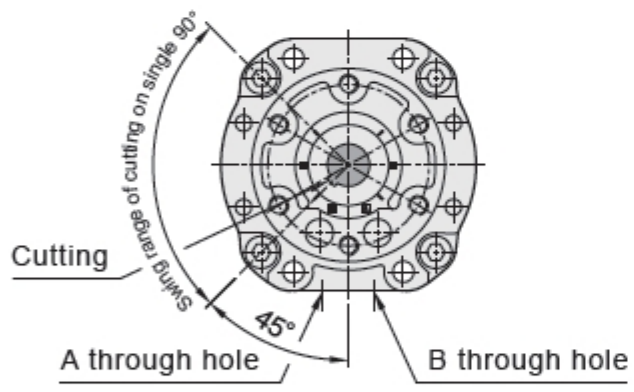

90°

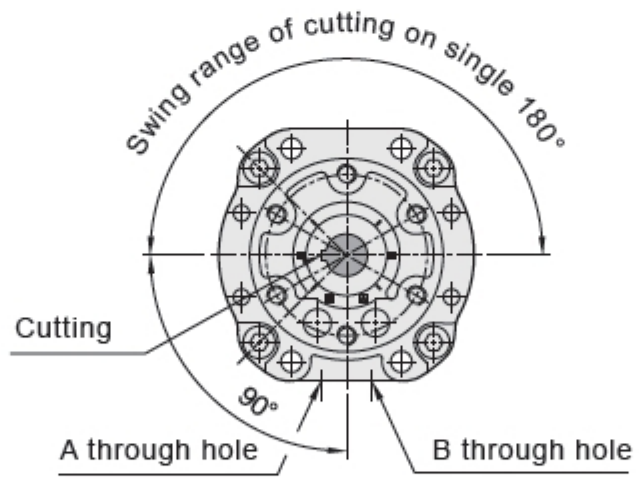

180°

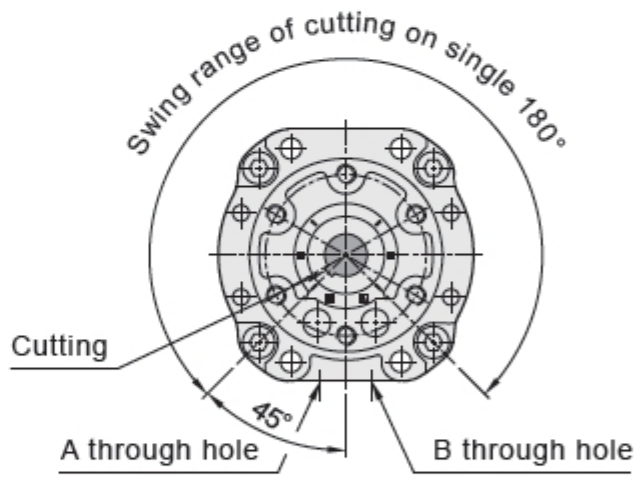

270°

How to order

RTM — 50 × 180 — C 1 — SG 1 — A 1

Model

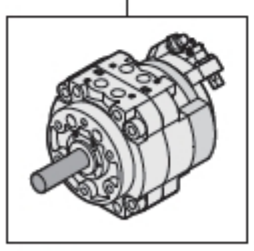

RTM series
Rotary cylinder

Torque

50 : 5 N·m

80 : 18 N·m

Rotation angle

90 - 90°

180 - 180°

270 - 270°

Sensor switch holder

None: Standard

C : Sensor holder rod

※ Standard equipment : Position blot
(Position for adjustment)

2 : Number of sensor holder
1 = 1 pcs
2 = 2 pcs

Sensor switch

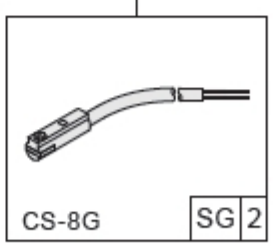

SG : sensor code (CS-8G)

SGN : sensor code (CS-8GN)

SGP : sensor code (CS-8GP)

2 : Number of sensor
1 = 1 pcs
2 = 2 pcs

Shock absorber

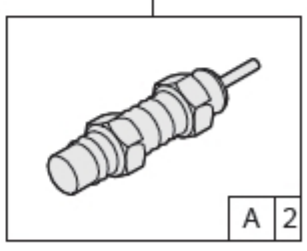

A : Shock absorber -SAC1005N

2 : Number of shock absorber
1 = 1 pcs
2 = 2 pcs

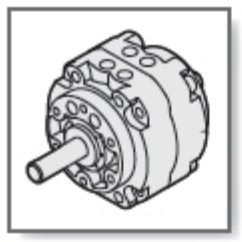

RTM series - ROTARY CYLINDER

External dimensions

RTM 50、80

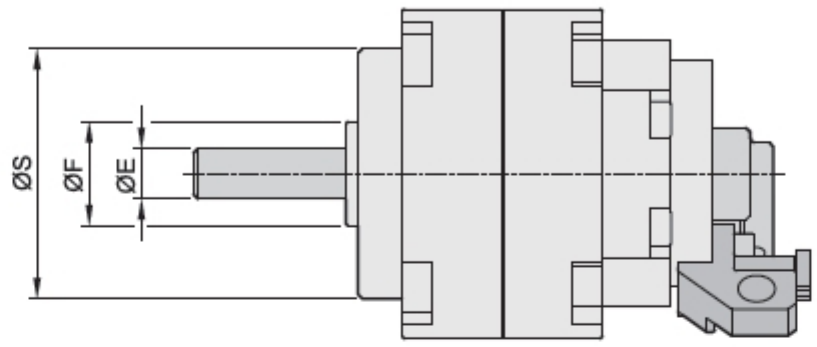

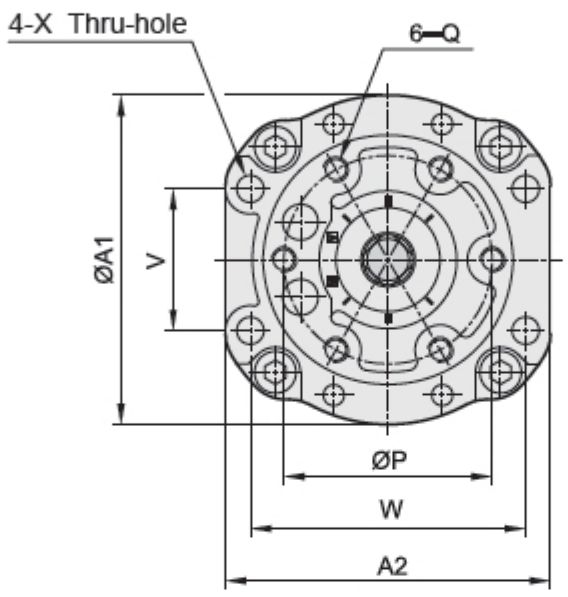

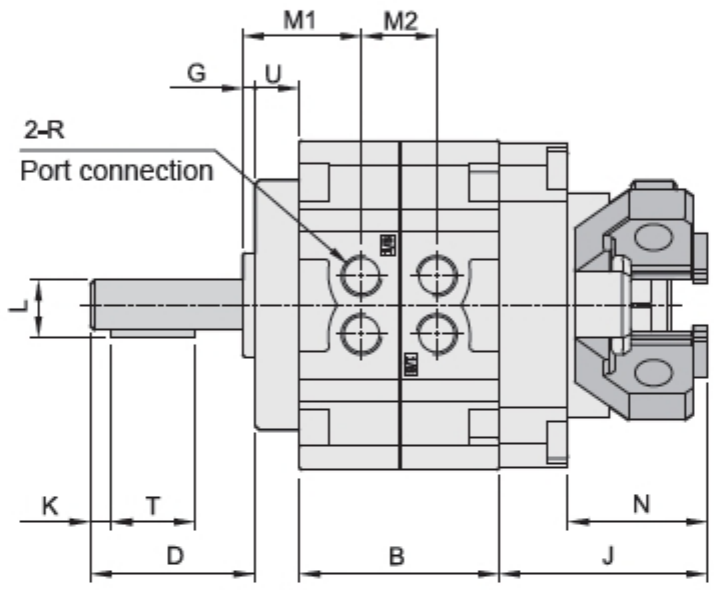

Key dimension

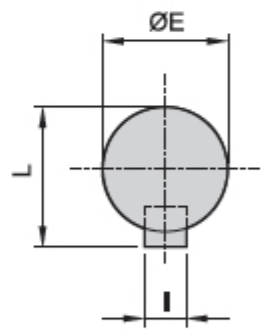

Angle adjustable and Sensor device

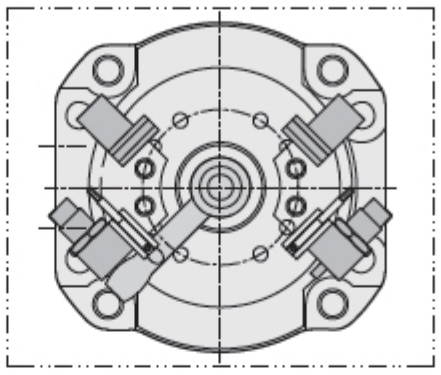

RTM□X90°

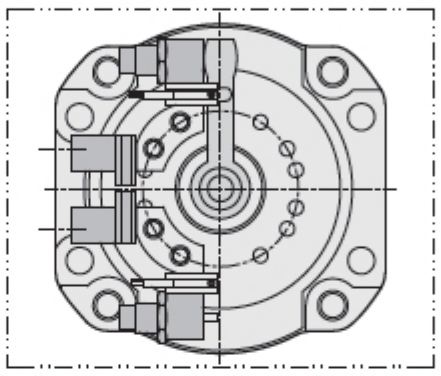

RTM□X180°

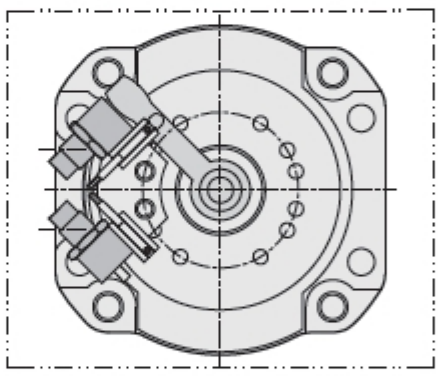

RTM□X270°

Dimension

Model	A1	A2	B	D	E	F	G	J	K	L	M1	M2	N	P	Q	R	S	T	U	V	W	ØX
RTM50-90°	79	78	48	39.5	12	25	3	50.5	5	13.5	26	18.2	40	50	M6X1.0P	RC1/8″	60	20	11	34	66	6.5
RTM50-180°																						
RTM50-270°																						
RTM80-90°	110	110	60	53.5	17	30	3	54.5	5	19	30	30.2	40	70	M8X1.25P	RC1/4″	88	41	15	48	94	9
RTM80-180°																						
RTM80-270°																						

Weight

Model	RTM 50	RTM 80
Weight	1.1 kg	2.3 kg

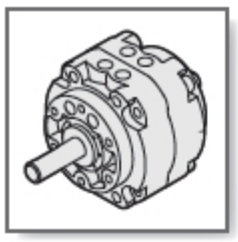

RTM 50,80 series - ROTARY CYLINDER

Angle adjustable and Sensorswitch device expression

Rotation angle and Rotation range

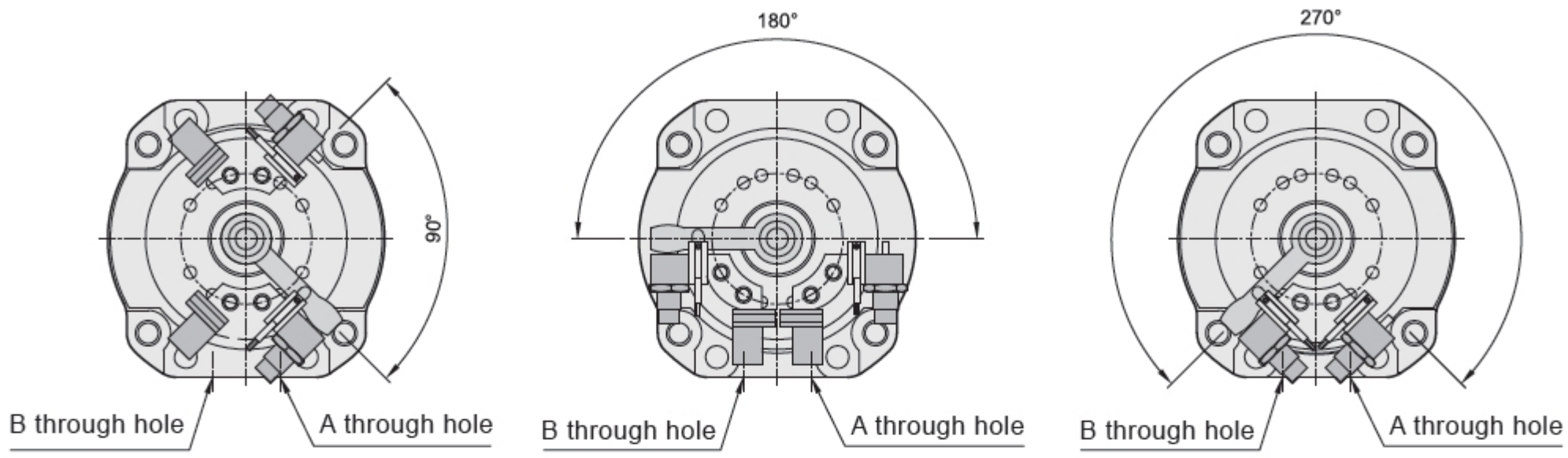

- 90°
- 180°
- 270°

◎ Cushion position block shows as above figure. It could be choice shock absorber for rotating position and adjust angle.The angle range will be 0 ~ -10°

Sensor switch type

- Cushion position block include sensor switch hole, and it can assemble CS-8G sensor switch.

◎ **Adjustment method :**

1. Insert the sensor Ⓢ into the hole of cushion position block Ⓜ
2. Rotate rocker arm to the suitable angle.
3. After adjusting sensor switch Ⓢ to the suitable position,it should lock the screw to finish.

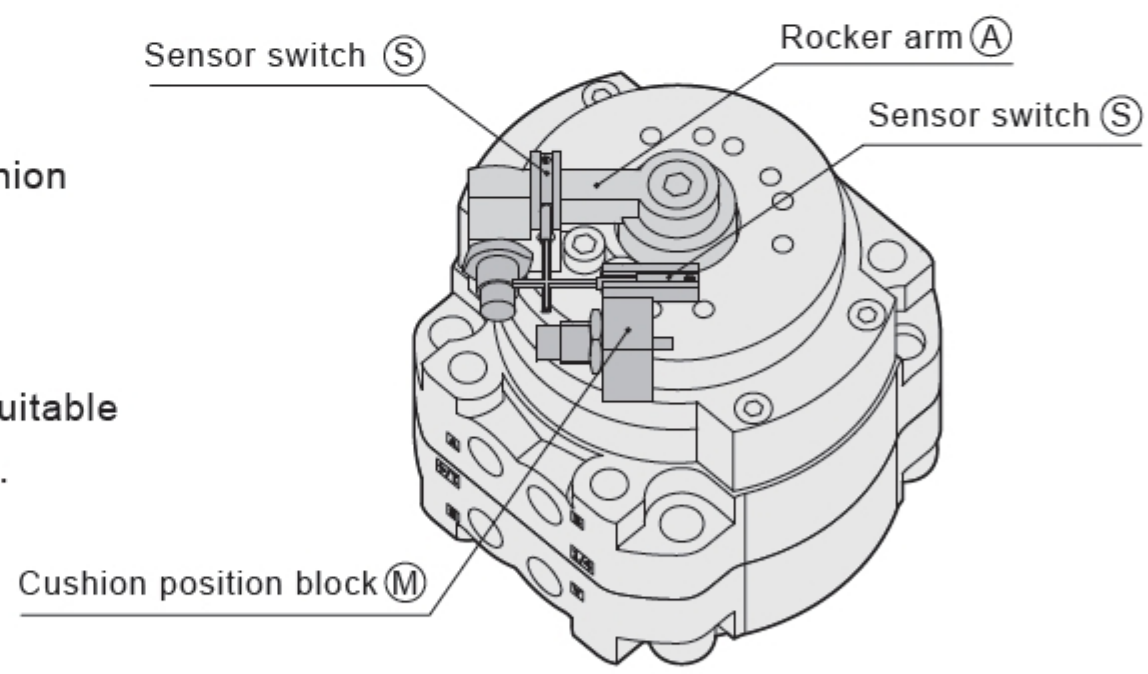

Sensor type

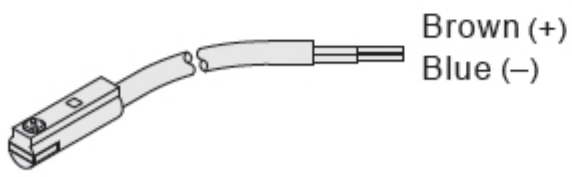

Voltage : DC 10V ~ 28V
AC 10V ~ 28V

CS-8G

(Please see P.22-1.13 sensor switch formulation.)

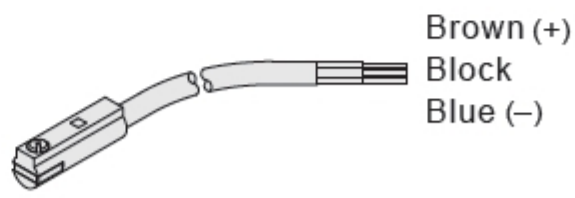

Voltage : DC 4.5V ~ 28V
AC 4.5V ~ 28V

CS-8GN(P)

(Please see P.22-1.13 sensor switch formulation.)